MN63UNIN050MFICN-RB8ST

Configuration

Type:	**M**
Size:	**N63**
Input:	**80 B14 ø120**
Output shaft/bore:	**Hollow output shaft**
Mounting:	**UNI** (Standard)
Mounting position:	**B8**
Input bore:	**Standard**
Coupling:	**-**
Terminal box position:	**A**

Distributor data

Customer:

Lead time:

Technical data

Input rpm (n_1):	**1400 min^{-1}**
Output rpm (n_2):	**58.33 min^{-1}**
Ratio (i):	**24**
Nominal power (P_{1R}):	**1.20 kW**
Nominal torque (M_{2R}):	**142 Nm**
Dynamic efficiency (RD):	**75%**

Direction of rotation

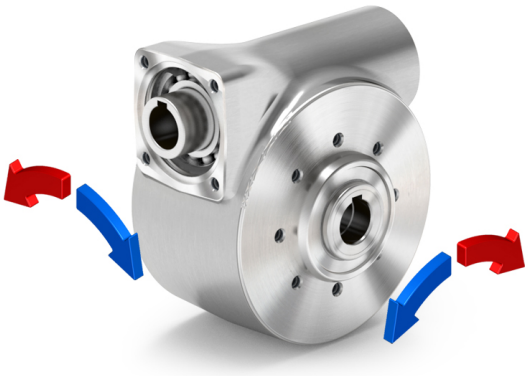

Selection

Motor power (P_{1M}):	**0.55 kW**
Output torque (M_{2M}):	**68 Nm**
Service factor (f.s.):	**2.1**

Lubrication

Oil quantity:	**0.45l**
ENI:	**Telium VSF 320**
SHELL:	**Omala S4 WE 320**

Axial and radial loads

Output shaft

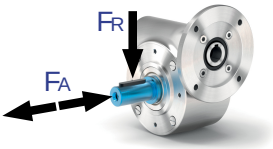

n_2 (min^{-1})	FA (N)	FR (N)
200	360	1800
150	400	2000
100	460	2300
75	500	2500
50	600	3000
25	700	3800
15	800	4000

On our website

Features
How to order
Datasheet
Accessories/options
Selection guide - fs
Mounting pos. - lubricant
Calc. the overhung load
Irreversibility
Thermal limit
Installation check list
Spare parts list
Complete catalogue
Selection by power (xls)
Atex certification

PN63UNI.. Basic gearbox
Riduttore base

M. flanges	Kit code	øF	A
71B14	KI634047	105	97
80B14	KI634046	120	99
90B14	KI634041	140	99

Gearbox weight *Peso riduttore*	10.0 kg

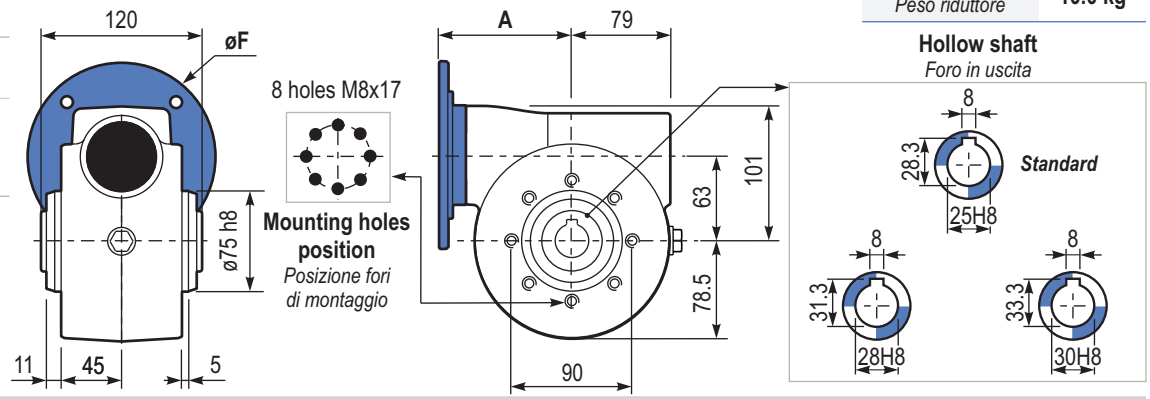

PN63PAI.. Feet
Piedini

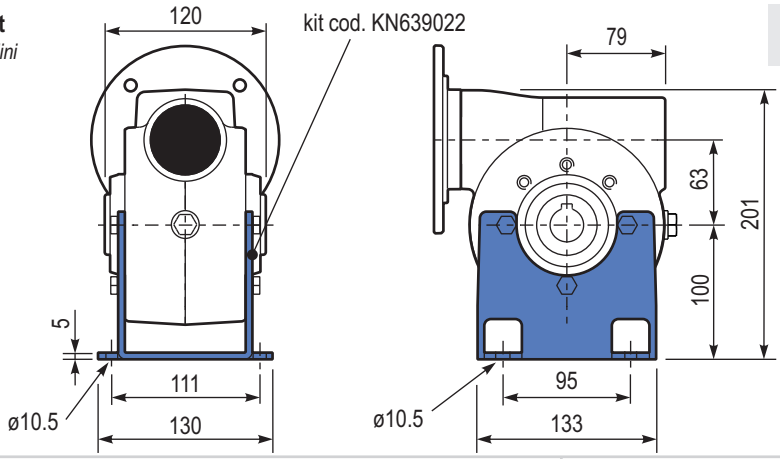

PN63PVI.. Feet
Piedini

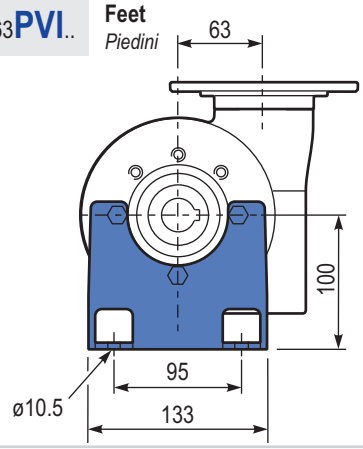

PN63FLL.. Output flange
Flangia uscita

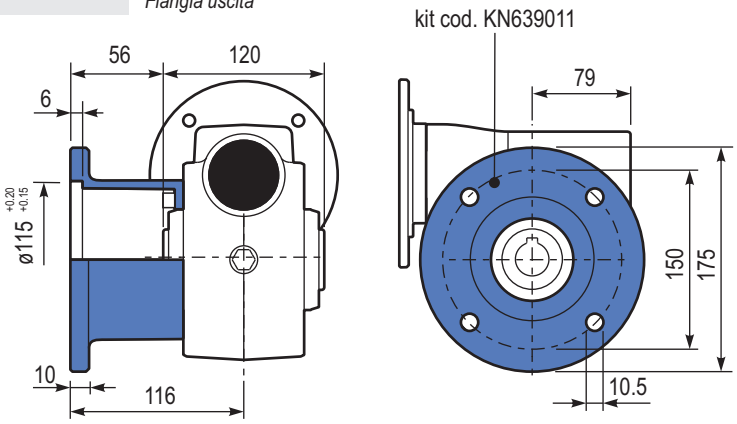

PN63BRI.. Reaction arm
Braccio di reazione

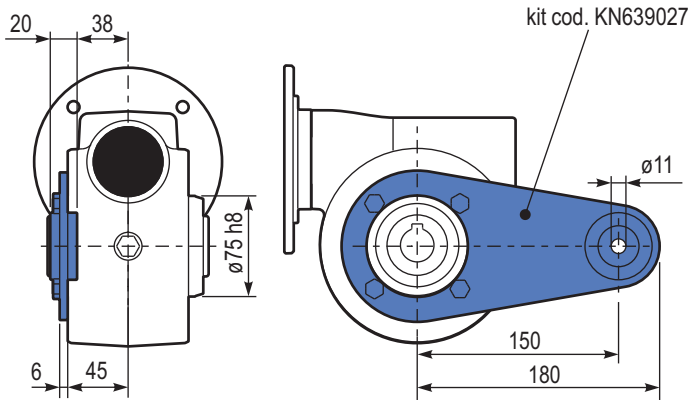

RN63UNI.. Input shaft
Albero in entrata

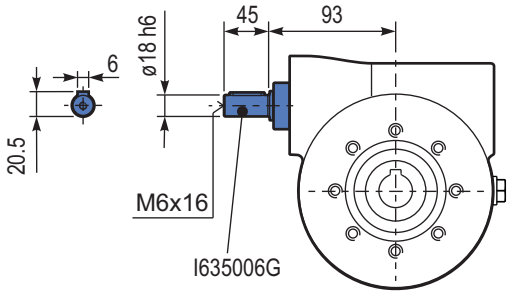
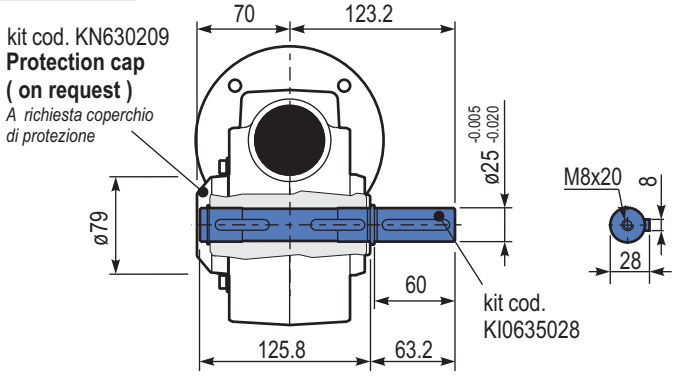
PN63..SMF Single output shaft
Albero semplice in uscita