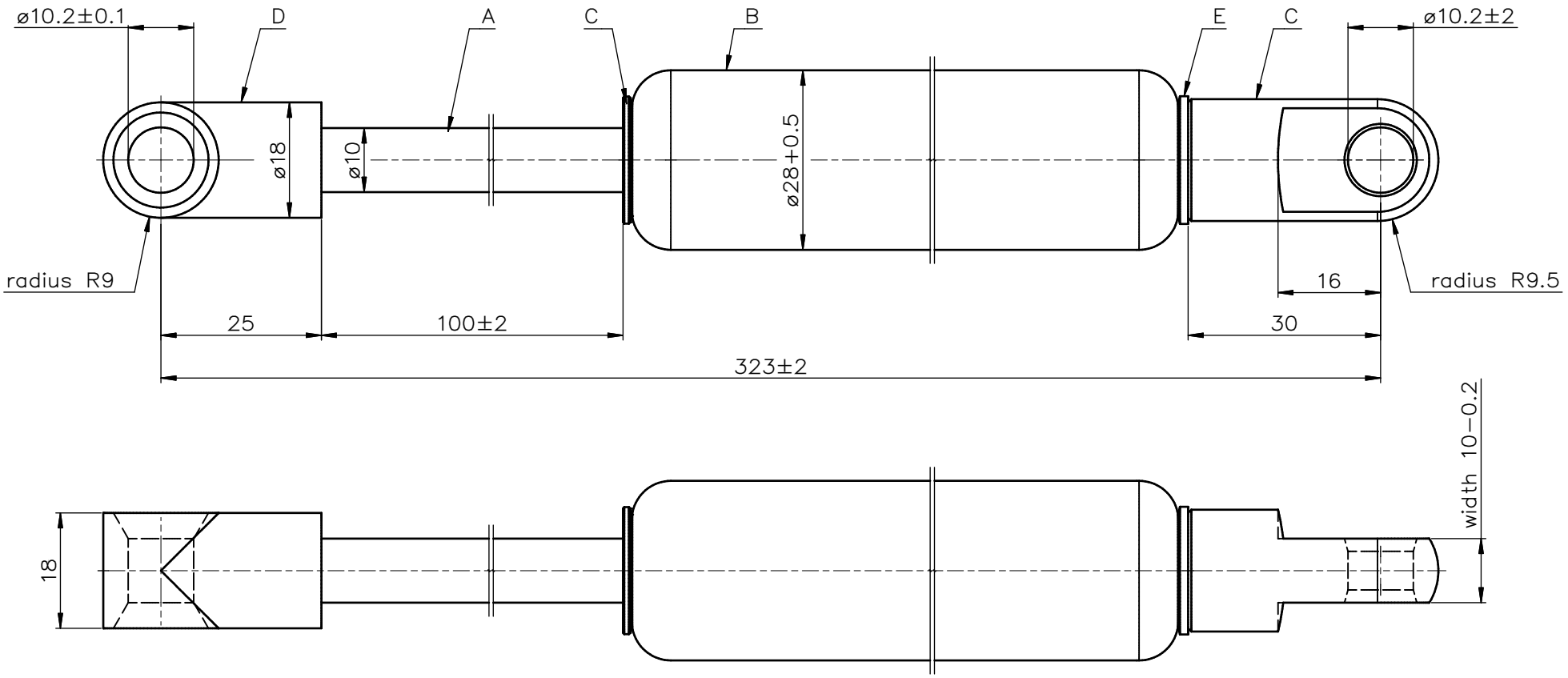

* Piston rod must be protected against paint, dirt and damage

* cylinder−side with valve and screwed hinge−eye (piston rod side)

Force tested statically, testing speed 750mm/min

Extension force F1 = 300N $^{+40N}_{-15N}$

Test condition: Piston rod downwards

Surface treatment

A = CeramPro

B = black powder coated

C = aluminium

D = zinc die casting

E = zinc plated steel

This drawing is not subject to the revision service.

Without our specifically acceptance, this drawing is not allowed to be copied or given to other persons.

scale: drawing not in scale | position:

Note: All dimensions in mm

	date	name
edited	23.11.2026	V.Skeljic
check.	23.11.2026	J.Sachsenmaier

gas spring ø10/28

Bansbach easylift GmbH
Barbarossastr. 8
D−73547 Lorch/Württemberg

B2M2F43−100−323−−001/300N

sheet