MTV

Linear unit

UNIMOTION

CHARACTERISTICS

The **MTV** series describes Linear Units with precision ball screw drive, integrated guide rail and compact dimensions. They provide high performances features, such as high speeds, good accuracy and repeatability.
They can easily be combined to multi-axis systems.
Excellent price-/performance ratio and quick delivery time are ensured.
The compact, precision-extruded aluminum Profile from 6063 AL with integrated Zero-backlash Ball rail guide system, allows high load capacities and optimal cycles for the movement of larger masses at high speed.
In the Linear Units MTV a precision ball screw, with tolerance class ISO7 (ISO5 on request), with reduced backlash of the ball nut is used.
A corrosion-resistant protection strip, protects all the parts in the profile from dust and other contaminants.
The aluminum profile includes T-slots for fixing the Linear Unit and for attaching sensors and switches. Also, a Reed switch can be used here.
The carriage, with central lubrication port, allows easy central re-lubrication of ball screw and Ball rail guide and provides the possibility to attach additional accessories on the side.
For the Linear Units MTV various adaptation options, for attaching (or redirecting), for Motors or Gearboxes are available.
To achieve higher speeds at the same stroke of the linear unit, the ball screw support system can be integrated. With this feature vibrations and deflections of the ball screw are reduced, therefore longer strokes are possible. The linear unit with integrated support system can have a higher axial load capacity.
Ball screw supports are made out of high quality plastic materials with high wear resistance properties.
Our system enables ball screw support in horizontal or vertical positioning of the linear unit.

A 2LR version of MTV linear unit is available, where two carriages are moving simultaneously in opposite directions. Both right and left handed precision ball screws are used, which are rigidly connected. The ball screw support system can also be integrated.

2LR version of the MTV linear unit

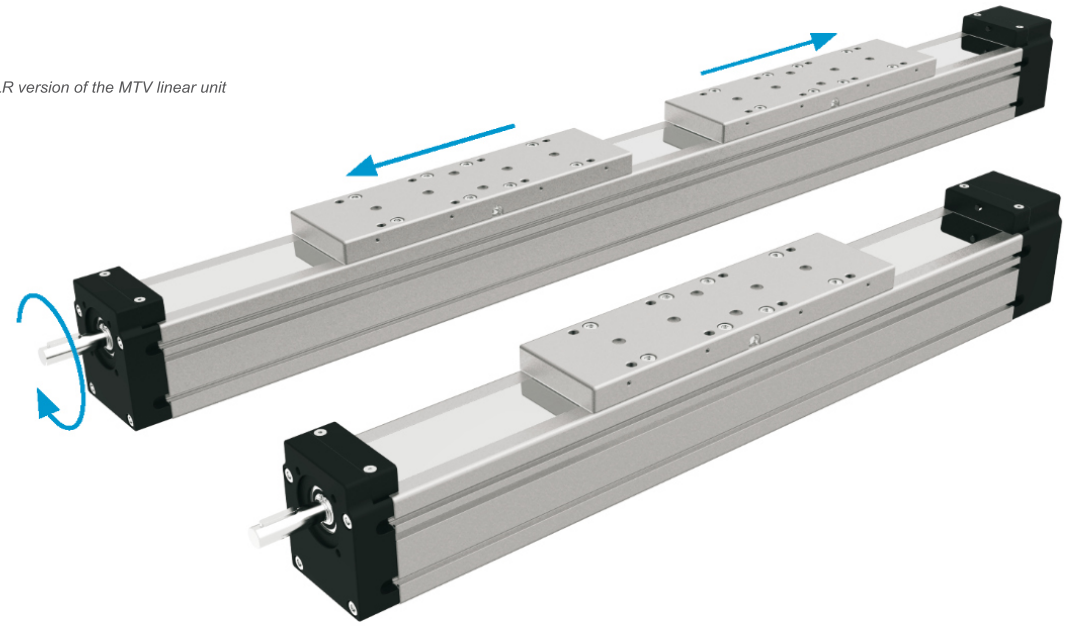

The aluminium profiles are manufactured according to the medium EN 12020-2 standard

Straightness = 0,35 mm/m; Max. torsion = 0,35 mm/m; Angular torsion = 0,2 mm/40 mm; Parallelism = 0,2 mm

In order to improve the products in this catalogue the specifications are subject to change without notice.

STRUCTURAL DESIGN

Standard version

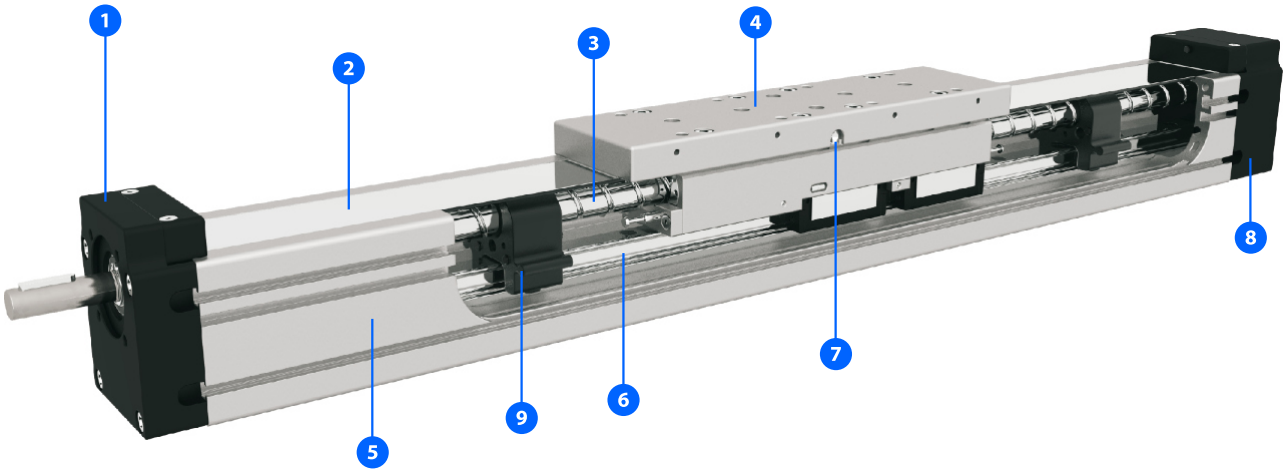

1 - Drive block with floating bearing (MTV 110 - fixed bearing)
2 - Corrosion-resistant protection strip
3 - Ball screw tolerance ISO7 (ISO5 available on request)
4 - Carriage; with built in Magnets
5 - Aluminium profile-Hard anodized
6 - Integrated Linear Ball Guideway
7 - Central lubrication port; both sides
8 - End block with fixed bearing (MTV 110 - floating bearing)
9 - Screw support - SA

2LR version

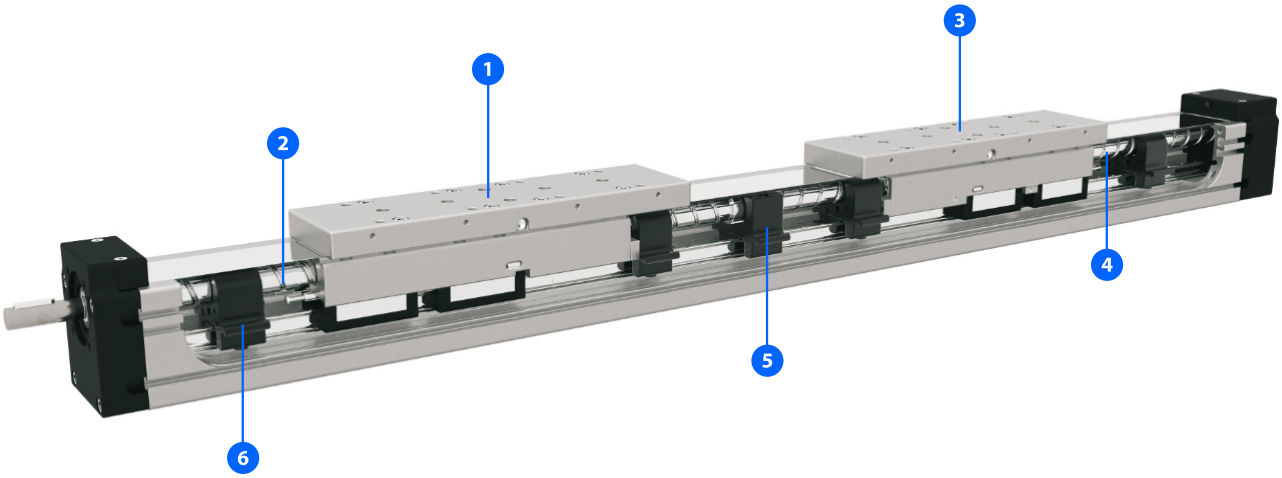

1 - Carriage; with build in right hand ball nut
2 - Right hand ball screw
3 - Carriage; with build in left hand ball nut
4 - Left hand ball screw
5 - Central screw support - fixed
6 - Screw support - SA

HOW TO ORDER

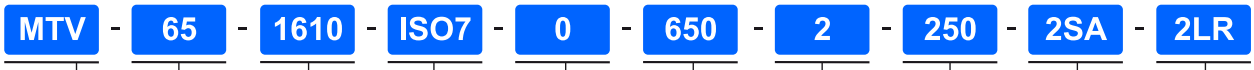

Series :

MTV

Size :

40

65

80

110

Ball screw :

MTV 40: Ø12×5, Ø12×10

MTV 65: Ø16×5, Ø16×10, Ø16×16

MTV 80: Ø20×5, Ø20×10, Ø20×20, Ø20×50

MTV 110: Ø32×5, Ø32×10, Ø32×20, Ø32×32

Ball screw tolerance :

ISO7 (Standard)

ISO5

Ball screw journal :

0 : Without keyway

1 : With keyway

*MTV 40 only available without keyway - **0***

Absolute stroke [mm] :
(Absolute stroke = Effective stroke + 2 x Safety stroke)

2LR version: Absolute stroke of one carriage

Number of carriages :

The stated number specifies the number of carriages on one Linear unit (up to 5 carriages avaliable)

Leave blank : For the case of one carriage

Connection between the carriages must be provided by the customer

Distance between two carriages [mm] :

Leave blank : For the case of one carriage

Number of screw supports n_{SA} :
(only even integer number - 2, 4, 6, 8, 10SA) - for MTV 40 and 65 max. 4SA is available

Leave blank : Without SA

2LR version :
Both right and left ball screws are used.

Leave blank : Standard version

Available for: MTV65: 16x5, 16x10
MTV80: 20x5

In order to improve the products in this catalogue the specifications are subject to change without notice.

TECHNICAL DATA

General technical data

Linear Unit	Carriage length	Dynamic Load capacity	Dynamic moment			Max. permissible loads					* Max. length	* Max. stroke
						Forces		Moments				
	Lv [mm]	C [N]	Mx [Nm]	My [Nm]	Mz [Nm]	Fpy [N]	Fpz [N]	Mpx [Nm]	Mpy [Nm]	Mpz [Nm]	Lmax [mm]	[mm]
MTV 40	150	4620	28	260	260	2300	3850	23	210	130	2900	2728

*For lengths / stroke over the stated value in the table above please contact us.
Values for max. stroke are not valid for multiple carriages and screw support SA
(equation of defining the linear unit length for particular size of the linear unit needs to be used).

Operating conditions	
Operating temp.	0°C ~ +60°C
Duty cycle	100%

For operating temperature out of the presented range, please contact us.

Recommended values of loads:

All the data of dynamic moments and load capacities stated in the upper table are theoretical without considering any safety factor. The safety factor depends on the application and its requested safety. We recommend a minimum safety factor (fs =5.0)

Modulus of elasticity

$E = 70000\ N / mm^2$

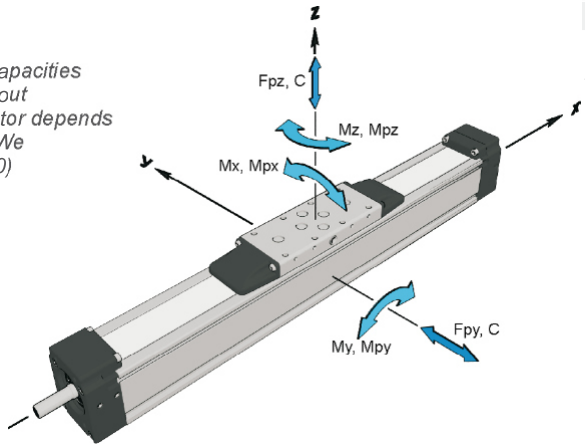

General technical data for double carriage

Linear Unit	Number of carriages	Dynamic Load capacity	* Dynamic moment			* Max. permissible loads				
						Forces		Moments		
		C [N]	Mx [Nm]	My [Nm]	Mz [Nm]	Fpy [N]	Fpz [N]	Mpx [Nm]	Mpy [Nm]	Mpz [Nm]
MTV 40	2	9240	56	4,6 × A	4,6 × A	4600	7690	46	3,8 × A	2,3 × A

*A - Distance between carriages [mm]. More info on following pages.

Presented values are for informational purposes only. Exact values can be calculated using our sizing selection tool on Unimotion web site.

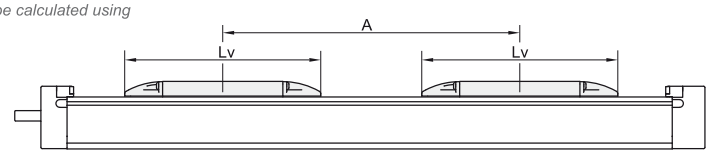

Ball Screw Drive data

Linear Unit	Ball screw	[3] Max. rotational speed	[1] Max. travel speed	Lead constant	[2] Max. Repeatability precision [mm]		Dynamic load capacity BS	Max. axial load	Max. drive torque	[4] Min. stroke	[1] Max. acceleration
	[d × l]	(Without SA) [rev / min]	(Without SA) [m / s]	[mm / rev]	STANDARD ISO7	ISO5	Ca [N]	Fx [N]	Ma [Nm]	[mm]	[m/s^2]
MTV 40	12 × 5	5800	0,49	5	± 0,02	± 0,01	5000	3400	3,0	30	20
	12 × 10		0,97	10	± 0,02	± 0,01	3800	2540	4,5		

[1] *Max. travel speed depends of the length of the linear unit, see diagram for particular size of the linear unit. For travel speed and acceleration over the stated value in the table above or diagrams please contact us.*

[2] *For the ball nut with the preload of 2%, please contact us.*

[3] *With SA version the max. rotation speed is limited to 3000 rev / min.*

[4] *For minimum stroke below the stated value in the table above please contact us.*

Planar moment of inertia

Linear Unit	Planar moment of inertia	
	Iy [cm^4]	Iz [cm^4]
MTV 40	10,0	11,0

TECHNICAL DATA

Mass, moved mass, mass moment of inertia and no load torque

Linear Unit	Ball screw [d × l]	Number of SA n_{SA}	* Mass of linear unit [kg]	* Moved mass [kg]
MTV 40	12 × 5	0	1,2 + 0,0028 × (Abs. stroke + (nc - 1) × A) + 0,47 × (nc - 1)	0,47 + 0,47 × (nc - 1)
		2	1,3 + 0,0028 × (Abs. stroke + (nc - 1) × A) + 0,47 × (nc - 1)	0,50 + 0,47 × (nc - 1)
		4	1,4 + 0,0028 × (Abs. stroke + (nc - 1) × A) + 0,47 × (nc - 1)	0,53 + 0,47 × (nc - 1)
	12 × 10	0	1,2 + 0,0028 × (Abs. stroke + (nc - 1) × A) + 0,47 × (nc - 1)	0,47 + 0,47 × (nc - 1)
		2	1,3 + 0,0028 × (Abs. stroke + (nc - 1) × A) + 0,47 × (nc - 1)	0,50 + 0,47 × (nc - 1)
		4	1,4 + 0,0028 × (Abs. stroke + (nc - 1) × A) + 0,47 × (nc - 1)	0,53 + 0,47 × (nc - 1)

Linear Unit	Ball screw [d × l]	Number of SA n_{SA}	* Mass moment of inertia [10^{-5} kg m^2]	** No load torque [Nm]
MTV 40	12 × 5	0	0,48 + 0,0012 × (Abs. stroke + (nc - 1) × A) + 0,03 × (nc - 1)	0,08 + 0,08 × (nc - 1)
		2	0,53 + 0,0012 × (Abs. stroke + (nc - 1) × A) + 0,03 × (nc - 1)	0,09 + 0,08 × (nc - 1)
		4	0,57 + 0,0012 × (Abs. stroke + (nc - 1) × A) + 0,03 × (nc - 1)	0,10 + 0,08 × (nc - 1)
	12 × 10	0	0,57 + 0,0012 × (Abs. stroke + (nc - 1) × A) + 0,12 × (nc - 1)	0,09 + 0,09 × (nc - 1)
		2	0,62 + 0,0012 × (Abs. stroke + (nc - 1) × A) + 0,12 × (nc - 1)	0,11 + 0,09 × (nc - 1)
		4	0,67 + 0,0012 × (Abs. stroke + (nc - 1) × A) + 0,12 × (nc - 1)	0,14 + 0,09 × (nc - 1)

*Absolute stroke [mm]
A - Distance between carriages [mm]. More info on following pages.
nc - Number of carriages

**The stated values are for strokes (and for distances between the carriages A) up to 500mm.
No Load Torque value increases with stroke (and with A) elongation.

Mass calculation doesn´t include mass of motor, reduction gear, switches and clamps.

Deflection of the linear unit

Fixed - fixed mounting

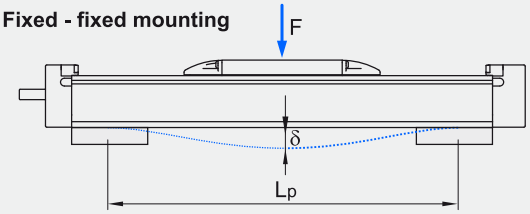

Fixed - free mounting

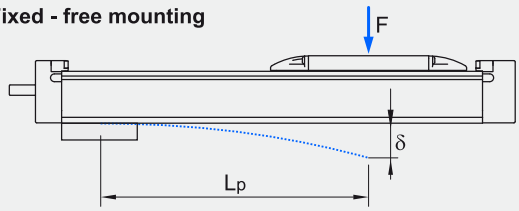

δ Maximum deflection of the linear unit [mm]
δmax Maximum permissible deflection of the linear unit [mm]
F Applied force [N]
Lp Unsupported profile length [mm]

The maximum permissible deflection δmax must not be exceeded. In the case that maximum deflection δ exceeds the maximum permissible deflection δmax additional profile supports are needed.

MTV 40

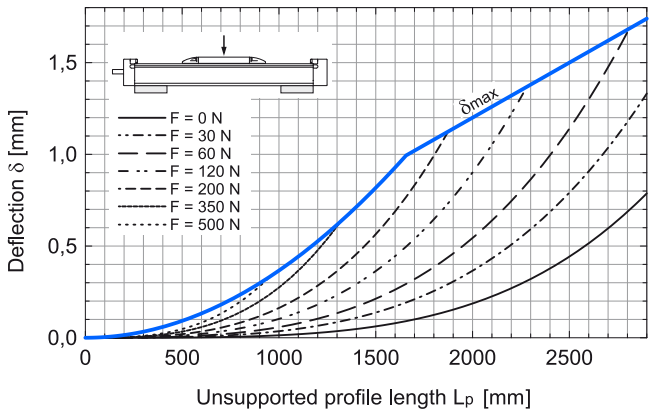

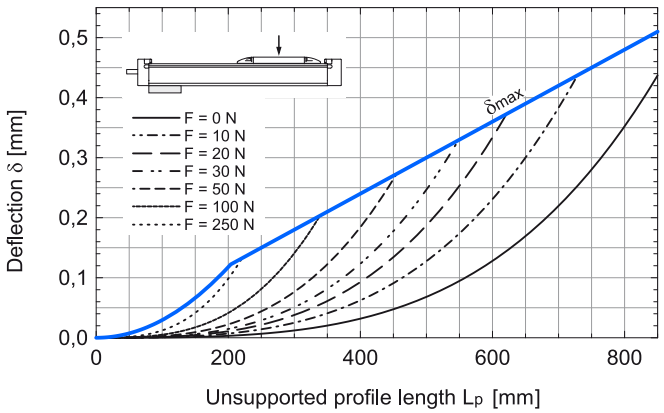

In order to improve the products in this catalogue the specifications are subject to change without notice.

DIMENSIONS

Linear Unit doesn't include any safety
Absolute stroke = Effective stroke + 2 x Safety stroke stroke.

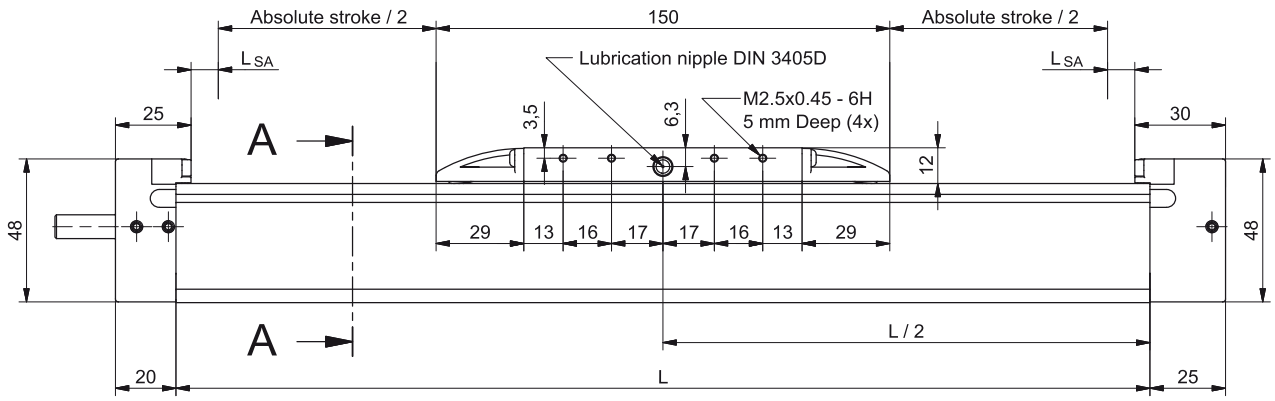

Journal without keyway.

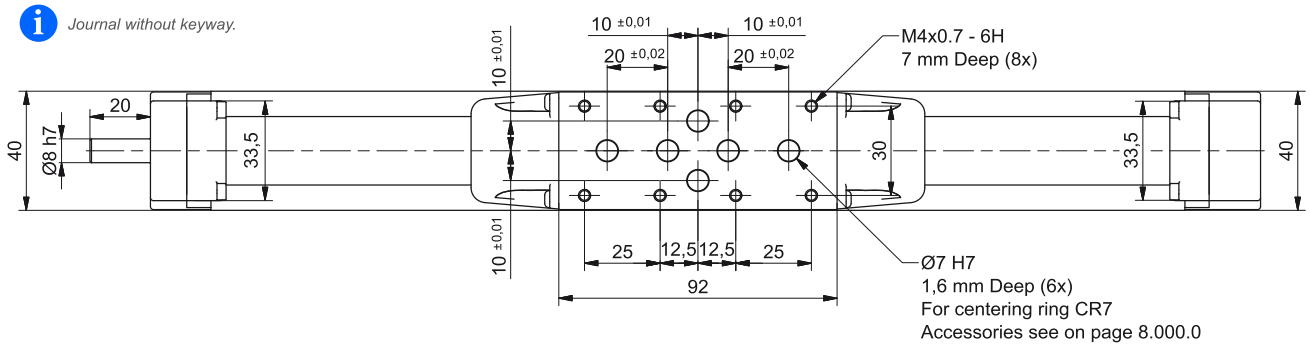

n_{SA}	L_{SA}
0	6,0
2SA	23,0
4SA	40,0

All dimensions in mm;
Drawings scales are not equal.

L_{SA} Additional length [mm]

Defining of the linear unit length

L = Effective stroke + 2 × Safety stroke + Lv + 2 × L_{SA} + A × (n_c - 1) + 10 mm

Ltotal = L + 45 mm, Lv = 150 mm

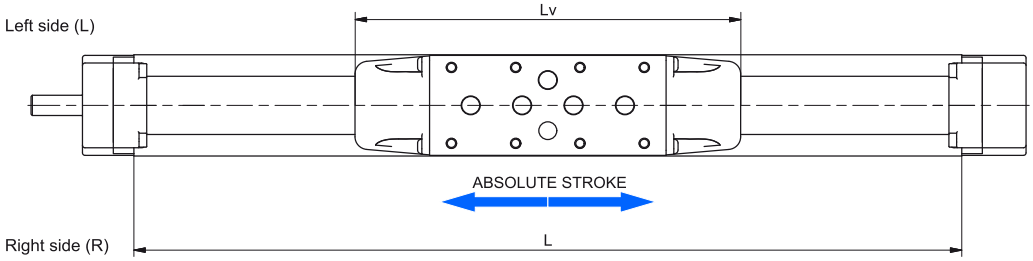

Multiple carriages

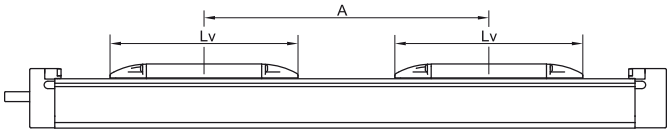

A ≥ Lv *Connection between the carriages must be provided by the customer*

n_c - Number of carriages

DIMENSIONS

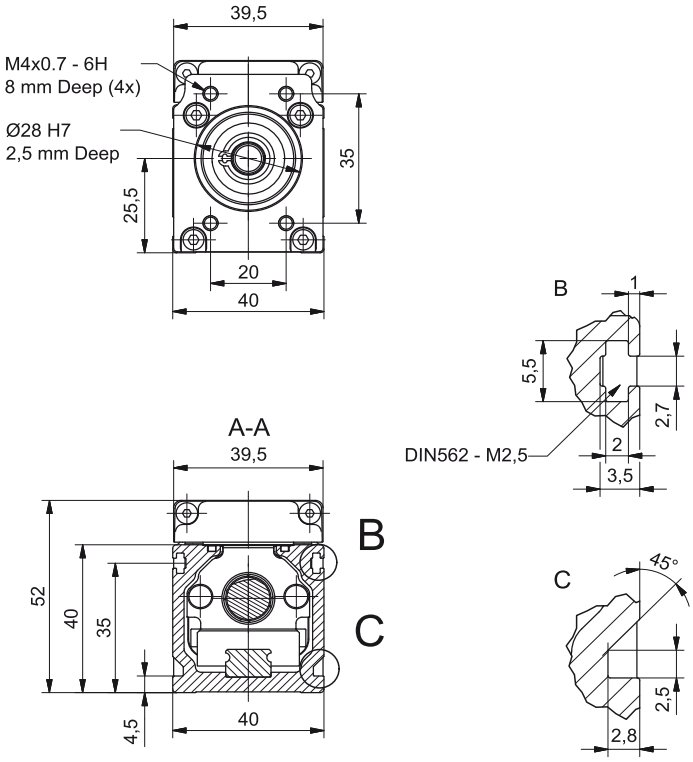

All dimensions in mm.
Drawings scales are not equal.

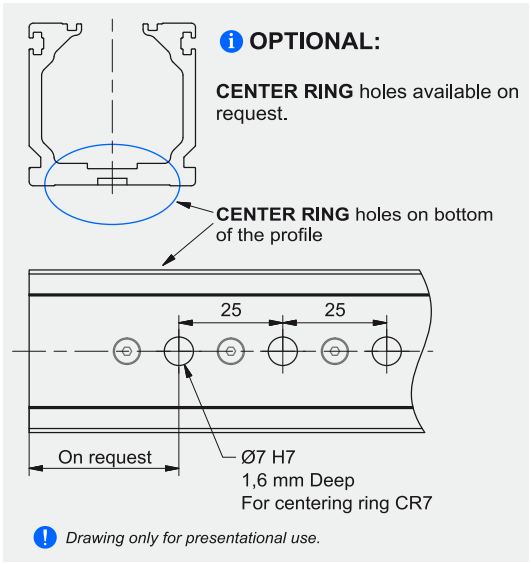

Drawing only for presentational use.

Mounting the drive

- by the **MOTOR SIDE DRIVE - MSD** *(Page 7.095.0)*
- by the **MOTOR ADAPTER WITH COUPLING** *(Page 8.020.0)*

Available on request.

Maximum travel speed as a function of the profile length (Vmax - L curves)

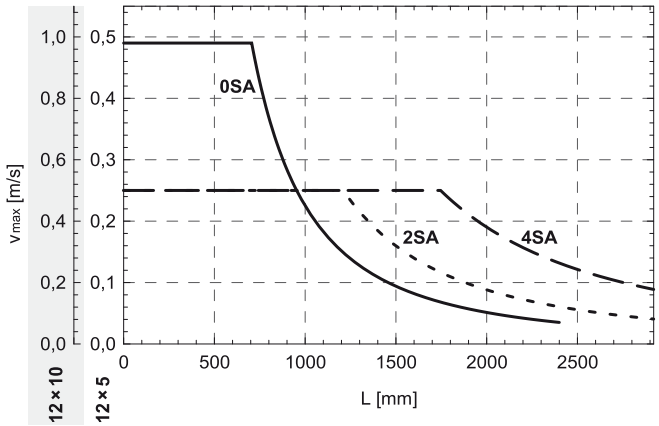

In order to improve the products in this catalogue the specifications are subject to change without notice.

TECHNICAL DATA

General technical data

Linear Unit	Carriage length Lv [mm]	Dynamic Load capacity C [N]	Dynamic moment Mx [Nm]	My [Nm]	Mz [Nm]	Max. permissible loads Forces Fpy [N]	Fpz [N]	Moments Mpx [Nm]	Mpy [Nm]	Mpz [Nm]	* Max. length Lmax [mm]	* Max. stroke [mm]
MTV 65	220	19800	158	700	700	6540	10190	94	350	233	2920	2690
MTV 65 2LR	220	19800	158	700	700	6540	10190	94	350	233	5789	2667

*For lengths / stroke over the stated value in the table above please contact us.
Values for max. stroke are not valid for multiple carriages and screw support SA
(equation of defining the linear unit length for particular size of the linear unit needs to be used).

Operating conditions	
Operating temp.	0°C ~ +60°C
Duty cycle	100%

For operating temperature out of the presented range, please contact us.

Recommended values of loads:

All the data of dynamic moments and load capacities stated in the upper table are theoretical without considering any safety factor. The safety factor depends on the application and its requested safety. We recommend a minimum safety factor (fs =5.0)

Modulus of elasticity

$E = 70000\ N / mm^2$

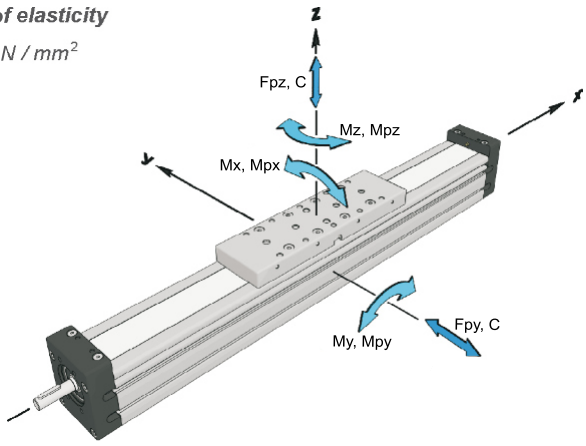

Standard version

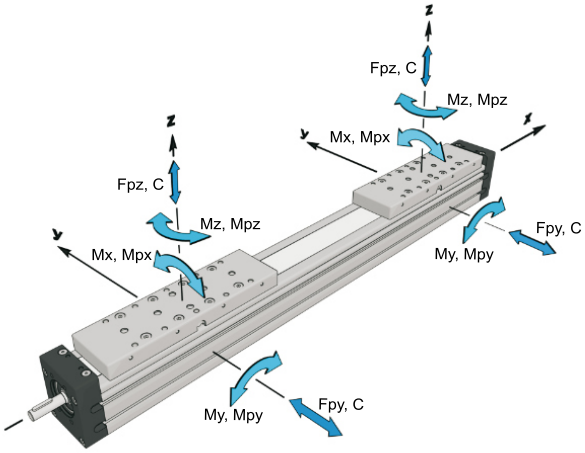

2LR version

General technical data for double carriage

Linear Unit	Number of carriages	Dynamic Load capacity C [N]	* Dynamic moment Mx [Nm]	My [Nm]	Mz [Nm]	* Max. permissible loads Forces Fpy [N]	Fpz [N]	Moments Mpx [Nm]	Mpy [Nm]	Mpz [Nm]
MTV 65 / MTV 65 2LR	2	39600	316	19,8 × A	19,8 × A	13070	20380	188	10,2 × A	6,5 × A

*A - Distance between carriages [mm]. More info on following pages.

Presented values are for informational purposes only. Exact values can be calculated using our sizing selection tool on Unimotion web site.

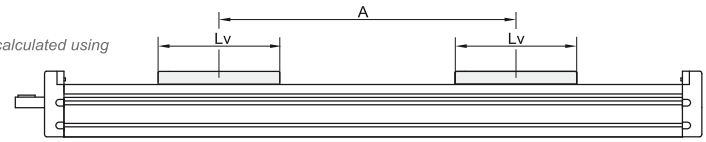

Ball Screw Drive data

Linear Unit	Ball screw [d × l]	3 Max. rotational speed (Without SA) [rev / min]	1 Max. travel speed (Without SA) [m / s]	Lead constant [mm / rev]	2 Max. Repeatability precision [mm] STANDARD ISO7	ISO5	Dynamic load capacity BS Ca [N]	5 Max. axial load Fx [N]	Max. drive torque Ma [Nm]	4 Min. stroke [mm]	1 Max. acceleration [m/s²]
MTV 65 MTV 65 2LR	16 × 5	4200	0,35	5	± 0,02	± 0,01	13150	8700	5,5 with Keyway 7,7 without Keyway	40	20
	16 × 10		0,70	10	± 0,02	± 0,01	11550	6730	5,5 with Keyway		
	16 × 16		1,12	16	± 0,02	± 0,01	8170	4200	11,9 without Keyway		

1 *Max. travel speed depends of the length of the linear unit, see diagram for particular size of the linear unit. For travel speed and acceleration over the stated value in the table above or diagrams please contact us.*

2 *For the ball nut with the preload of 2%, please contact us.*

3 *With SA or 2LR version the max. rotation speed is limited to 3000 rev / min.*

4 *For minimum stroke below the stated value in the table above please contact us.*

5 *In the case of 2RL version the axial load is total axial load of both carriages.*

TECHNICAL DATA

Mass, moved mass, mass moment of inertia and no load torque

Linear Unit	Ball screw [d × l]	Number of SA n_{SA}	* Mass of linear unit [kg]	* Moved mass [kg]
MTV 65	16 × 5	0	4,0 + 0,0073 × (Abs. stroke + (nc - 1) × A) + 1,5 × (nc - 1)	1,50 + 1,50 × (nc - 1)
		2	4,5 + 0,0073 × (Abs. stroke + (nc - 1) × A) + 1,5 × (nc - 1)	1,58 + 1,50 × (nc - 1)
		4	5,0 + 0,0073 × (Abs. stroke + (nc - 1) × A) + 1,5 × (nc - 1)	1,66 + 1,50 × (nc - 1)
	16 × 5 2LR version	0	7,2 + 0,0146 × (Abs. stroke + (nc - 1) × A) + 3,0 × (nc - 1)	3,00 + 3,00 × (nc - 1)
		2	8,2 + 0,0146 × (Abs. stroke + (nc - 1) × A) + 3,0 × (nc - 1)	3,16 + 3,00 × (nc - 1)
		4	9,2 + 0,0146 × (Abs. stroke + (nc - 1) × A) + 3,0 × (nc - 1)	3,32 + 3,00 × (nc - 1)
	16 × 10	0	4,0 + 0,0073 × (Abs. stroke + (nc - 1) × A) + 1,5 × (nc - 1)	1,50 + 1,50 × (nc - 1)
		2	4,5 + 0,0073 × (Abs. stroke + (nc - 1) × A) + 1,5 × (nc - 1)	1,58 + 1,50 × (nc - 1)
		4	5,0 + 0,0073 × (Abs. stroke + (nc - 1) × A) + 1,5 × (nc - 1)	1,66 + 1,50 × (nc - 1)
	16 × 10 2LR version	0	7,2 + 0,0146 × (Abs. stroke + (nc - 1) × A) + 3,0 × (nc - 1)	3,00 + 3,00 × (nc - 1)
		2	8,2 + 0,0146 × (Abs. stroke + (nc - 1) × A) + 3,0 × (nc - 1)	3,16 + 3,00 × (nc - 1)
		4	9,2 + 0,0146 × (Abs. stroke + (nc - 1) × A) + 3,0 × (nc - 1)	3,32 + 3,00 × (nc - 1)
	16 × 16	0	4,0 + 0,0073 × (Abs. stroke + (nc - 1) × A) + 1,5 × (nc - 1)	1,50 + 1,50 × (nc - 1)
		2	4,5 + 0,0073 × (Abs. stroke + (nc - 1) × A) + 1,5 × (nc - 1)	1,58 + 1,50 × (nc - 1)
		4	5,0 + 0,0073 × (Abs. stroke + (nc - 1) × A) + 1,5 × (nc - 1)	1,66 + 1,50 × (nc - 1)

Linear Unit	Ball screw [d × l]	Number of SA n_{SA}	* Mass moment of inertia [10^{-5} kg m^2]	** No load torque [Nm]
MTV 65	16 × 5	0	1,6 + 0,0052 × (Abs. stroke + (nc - 1) × A) + 0,09 × (nc - 1)	0,14 + 0,14 × (nc - 1)
		2	1,9 + 0,0052 × (Abs. stroke + (nc - 1) × A) + 0,09 × (nc - 1)	0,16 + 0,14 × (nc - 1)
		4	2,2 + 0,0052 × (Abs. stroke + (nc - 1) × A) + 0,09 × (nc - 1)	0,18 + 0,14 × (nc - 1)
	16 × 5 2LR version	0	2,9 + 0,0104 × (Abs. stroke + (nc - 1) × A) + 0,19 × (nc - 1)	0,28 + 0,28 × (nc - 1)
		2	3,5 + 0,0104 × (Abs. stroke + (nc - 1) × A) + 0,19 × (nc - 1)	0,32 + 0,28 × (nc - 1)
		4	4,1 + 0,0104 × (Abs. stroke + (nc - 1) × A) + 0,19 × (nc - 1)	0,35 + 0,28 × (nc - 1)
	16 × 10	0	1,9 + 0,0052 × (Abs. stroke + (nc - 1) × A) + 0,38 × (nc - 1)	0,15 + 0,15 × (nc - 1)
		2	2,2 + 0,0052 × (Abs. stroke + (nc - 1) × A) + 0,38 × (nc - 1)	0,19 + 0,15 × (nc - 1)
		4	2,5 + 0,0052 × (Abs. stroke + (nc - 1) × A) + 0,38 × (nc - 1)	0,22 + 0,15 × (nc - 1)
	16 × 10 2LR version	0	3,5 + 0,0104 × (Abs. stroke + (nc - 1) × A) + 0,76 × (nc - 1)	0,30 + 0,30 × (nc - 1)
		2	4,1 + 0,0104 × (Abs. stroke + (nc - 1) × A) + 0,76 × (nc - 1)	0,34 + 0,30 × (nc - 1)
		4	4,8 + 0,0104 × (Abs. stroke + (nc - 1) × A) + 0,76 × (nc - 1)	0,37 + 0,30 × (nc - 1)
	16 × 16	0	2,5 + 0,0052 × (Abs. stroke + (nc - 1) × A) + 0,97 × (nc - 1)	0,20 + 0,20 × (nc - 1)
		2	2,8 + 0,0052 × (Abs. stroke + (nc - 1) × A) + 0,97 × (nc - 1)	0,26 + 0,20 × (nc - 1)
		4	3,2 + 0,0052 × (Abs. stroke + (nc - 1) × A) + 0,97 × (nc - 1)	0,31 + 0,20 × (nc - 1)

*Absolute stroke [mm]
A - Distance between carriages [mm]. More info on following pages.
nc - Number of carriages

**The stated values are for strokes (and for distances between the carriages A) up to 500mm.
No Load Torque value increases with stroke (and with A) elongation.

Mass calculation doesn´t include mass of motor, reduction gear, switches and clamps.

Planar moment of inertia

Linear Unit	Planar moment of inertia	
	I_y [cm^4]	I_z [cm^4]
MTV 65 MTV 65 2LR	71,3	89,4

In order to improve the products in this catalogue the specifications are subject to change without notice.

TECHNICAL DATA

Deflection of the linear unit

Fixed - fixed mounting

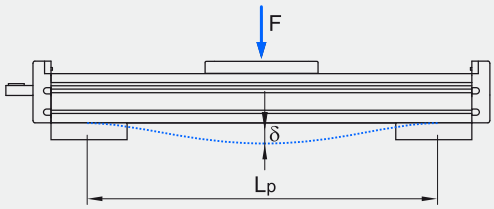

Fixed - free mounting

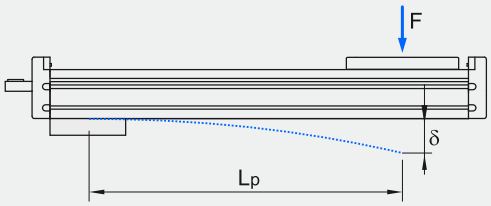

δ Maximum deflection of the linear unit [mm]
δmax Maximum permissible deflection of the linear unit [mm]
F Applied force [N]
Lp Unsupported profile length [mm]

The maximum permissible deflection δmax must not be exceeded. In the case that maximum deflection δ exceeds the maximum permissible deflection δmax additional profile supports are needed.

MTV 65

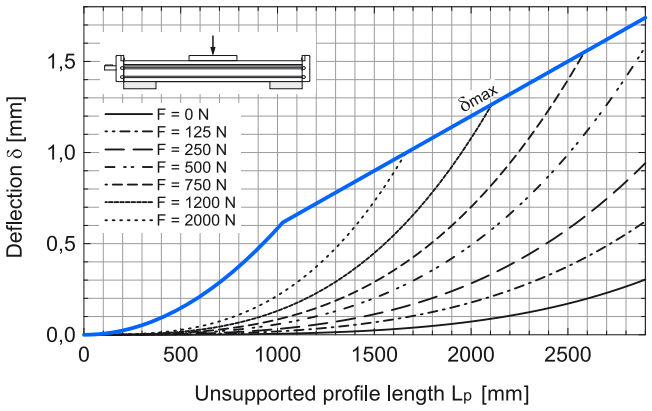

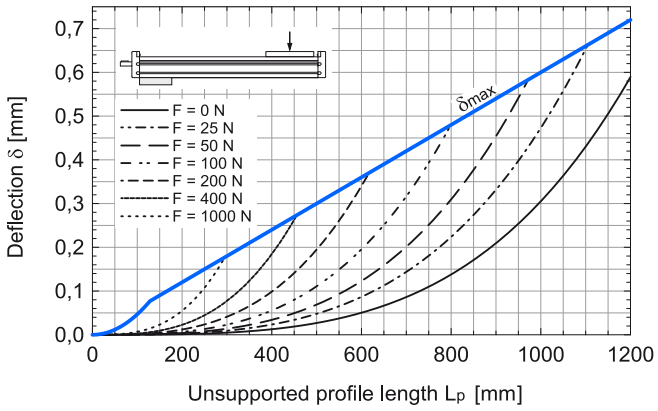

Maximum travel speed as a function of the profile length (Vmax - L curves)

MTV 65

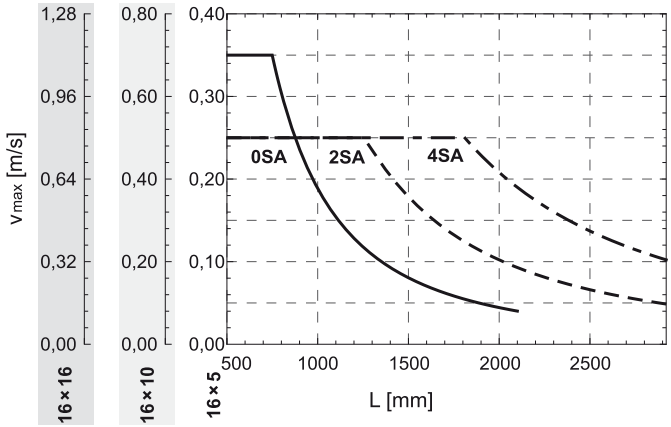

TECHNICAL DATA

Deflection of the 2LR version

Fixed - fixed mounting

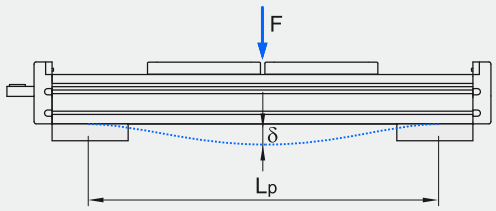

δ Maximum deflection of the linear unit [mm]
δmax Maximum permissible deflection of the linear unit [mm]
F Applied force [N]
Lp Unsupported profile length [mm]

The maximum permissible deflection δmax must not be exceeded. In the case that maximum deflection δ exceeds the maximum permissible deflection δmax additional profile supports are needed.

MTV 65 2LR

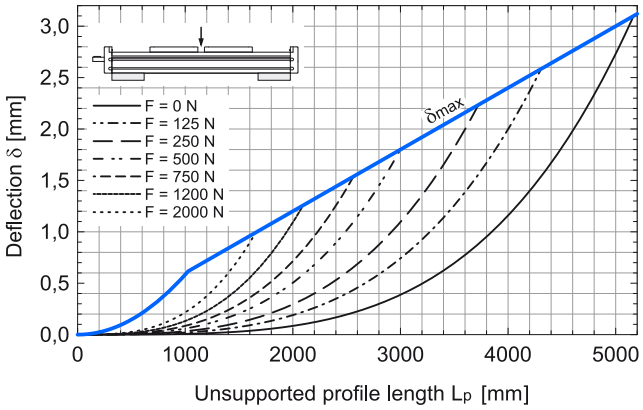

Maximum travel speed as a function of the profile length (Vmax - L curves)

MTV 65 2LR

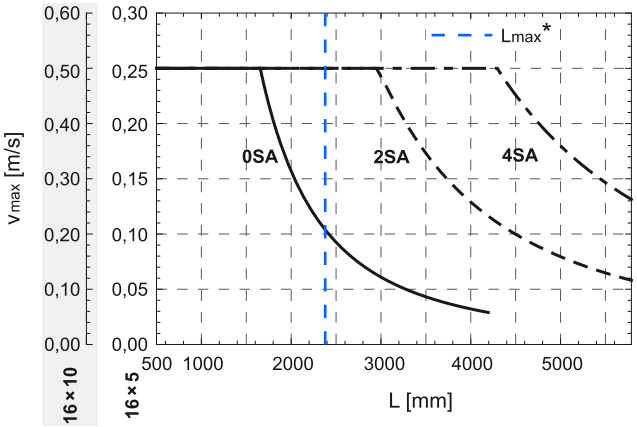

* Max. length Lmax of MTV 65 2LR linear unit with 16x10 ball screw.

In order to improve the products in this catalogue the specifications are subject to change without notice.

DIMENSIONS

Linear Unit doesn't include any safety
Absolute stroke = Effective stroke + 2 x Safety stroke stroke.

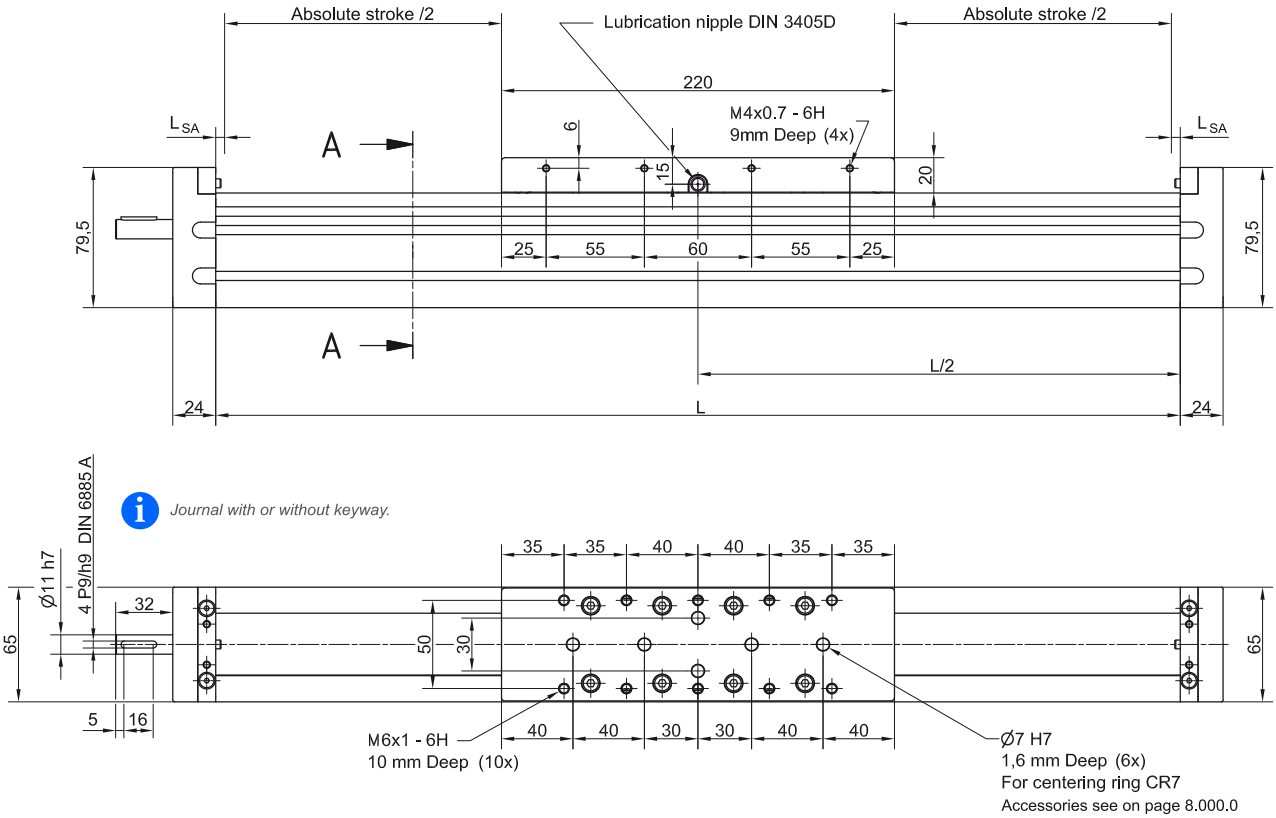

n	L_{SA}
0	5,0
2SA	31,0
4SA	62,0

L_{SA} Additional length [mm]

All dimensions in mm;
Drawings scales are not equal.

2LR version

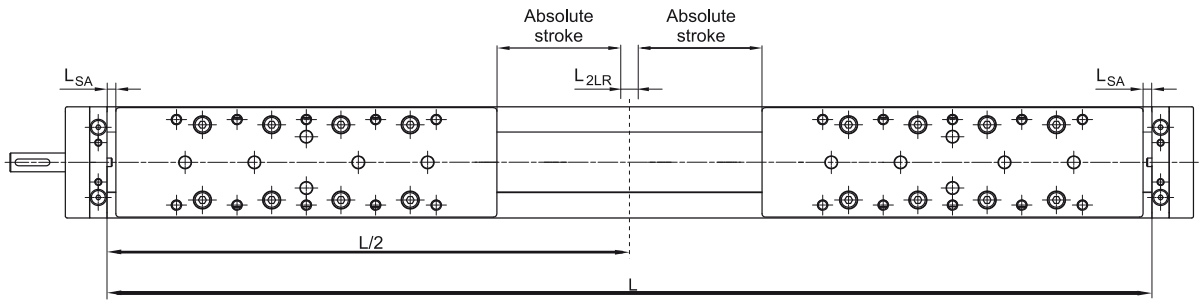

n	L_{SA}	L_{2LR}
0	5,0	5,0
2SA	31,0	67,0
4SA	62,0	129,0

L_{SA} Additional length [mm]
L_{2LR} Min. distance between carriages [mm]

DIMENSIONS

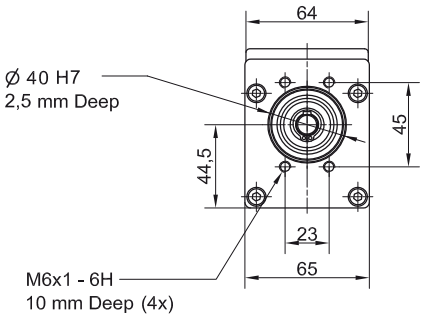

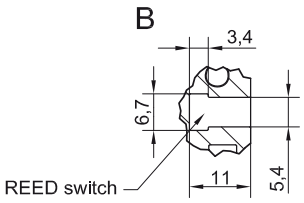

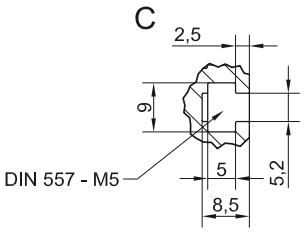

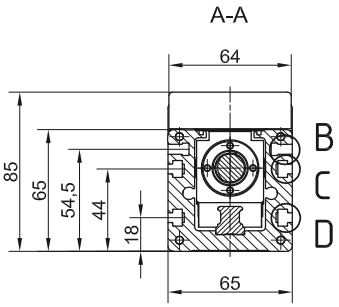

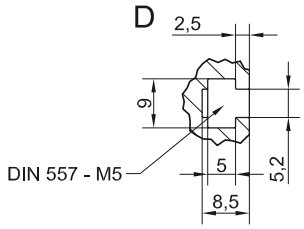

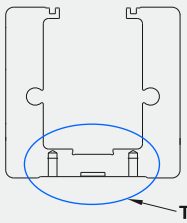

OPTIONAL:

TAP / PIN holes available on request.

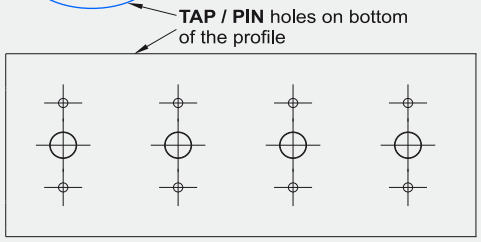

Drawing only for presentational use

All dimensions in mm.
Drawings scales are not equal.

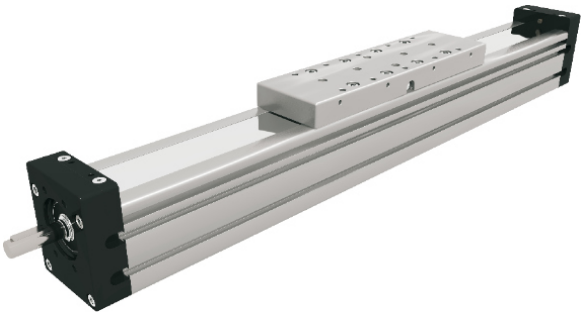

Mounting the drive

- by the **MOTOR SIDE DRIVE - MSD** *(Page 7.095.0)*
- by the **MOTOR ADAPTER WITH COUPLING** *(Page 8.020.0)*

Available on request.

Defining of the linear unit length

Standard version

L = Effective stroke + 2 × Safety stroke + Lv + 2 × LSA + A × (nc - 1)

Ltotal = L + 48 mm, Lv = 220 mm

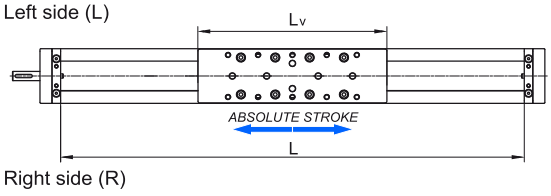

Multiple carriages

A ≥ Lv *Connection between the carriages must be provided by the customer*

nc - Number of carriages

Version 2LR

L = 2 × (Effective stroke + 2 × Safety stroke) + 2 × Lv + 2 × LSA + L2LR + A × (nc - 1)

Ltotal = L + 48 mm, Lv = 220 mm

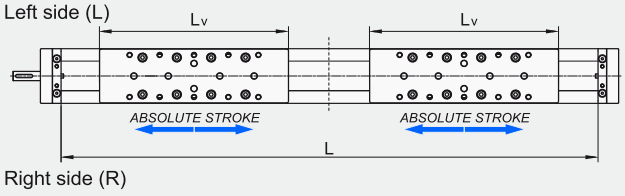

Multiple carriages

A ≥ Lv *Connection between the carriages must be provided by the customer*

nc - Number of carriages

In order to improve the products in this catalogue the specifications are subject to change without notice.

TECHNICAL DATA

General technical data

Linear Unit	Carriage length	Dynamic Load capacity	Dynamic moment			Max. permissible loads					* Max. length	* Max. stroke
						Forces		Moments				
	Lv [mm]	C [N]	Mx [Nm]	My [Nm]	Mz [Nm]	Fpy [N]	Fpz [N]	Mpx [Nm]	Mpy [Nm]	Mpz [Nm]	Lmax [mm]	[mm]
MTV 80	290	34200	370	1470	1470	8930	15070	150	500	384	5480	5163
MTV 80 2LR	290	34200	370	1470	1470	8930	15070	150	500	384	11055	5224

*For lengths / stroke over the stated value in the table above please contact us.
Values for max. stroke are not valid for multiple carriages and screw support SA
(equation of defining the linear unit length for particular size of the linear unit needs to be used).

Operating conditions	
Operating temp.	0°C ~ +60°C
Duty cycle	100%

For operating temperature out of the presented range, please contact us.

Recommended values of loads:

All the data of dynamic moments and load capacities stated in the upper table are theoretical without considering any safety factor. The safety factor depends on the application and its requested safety. We recommend a minimum safety factor (fs =5.0)

Modulus of elasticity

$E = 70000\ N / mm^2$

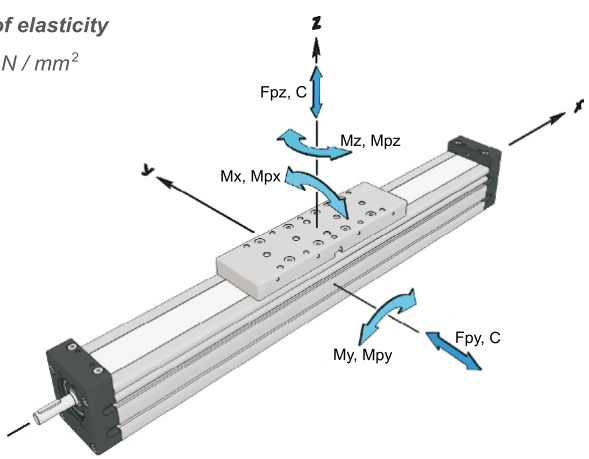

Standard version

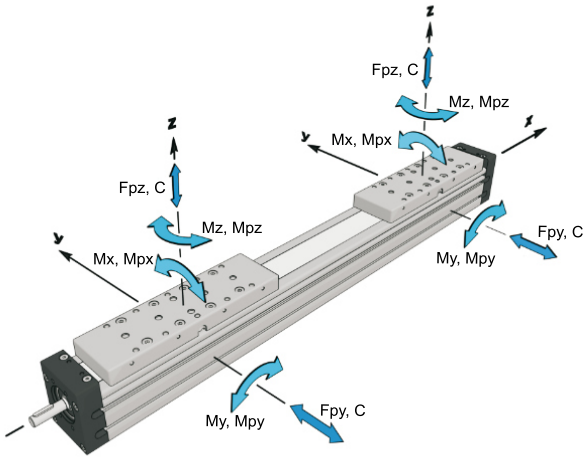

2LR version

General technical data for double carriage

Linear Unit	Number of carriages	Dynamic Load capacity	* Dynamic moment			* Max. permissible loads				
						Forces		Moments		
		C [N]	Mx [Nm]	My [Nm]	Mz [Nm]	Fpy [N]	Fpz [N]	Mpx [Nm]	Mpy [Nm]	Mpz [Nm]
MTV 80 / MTV 80 2LR	2	68400	740	34,2 × A	34,2 × A	17860	30130	300	15,0 × A	8,9 × A

*A - Distance between carriages [mm]. More info on following pages.

Presented values are for informational purposes only. Exact values can be calculated using our sizing selection tool on Unimotion web site.

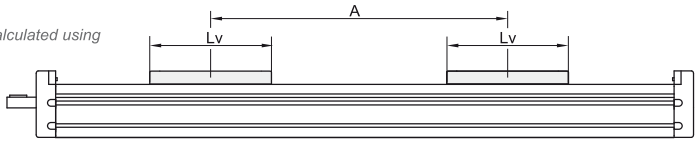

Ball Screw Drive data

Linear Unit	Ball screw	3 Max. rotational speed	1 Max. travel speed	Lead constant	2 Max. Repeatability precision [mm]		Dynamic load capacity BS	5 Max. axial load	Max. drive torque	4 Min. stroke	1 Max. acceleration
		(Without SA)	(Without SA)		STANDARD						
	[d × l]	[rev / min]	[m / s]	[mm / rev]	ISO7	ISO5	Ca [N]	Fx [N]	Ma [Nm]	[mm]	[m/s^2]
MTV 80 MTV 80 2LR	20 × 5	3300	0,28	5	± 0,02	± 0,01	14800	14800	11,9 with Keyway 13,0 without Keyway	55	20
	20 × 10		0,55	10	± 0,02	± 0,01	15900	13850	11,9 with Keyway 24,5 without Keyway		
	20 × 20		1,10	20	± 0,02	± 0,01	16250	6930			
	20 × 50	3000	2,50	50	± 0,02	± 0,01	13000	2770			

[1] *Max. travel speed depends of the length of the linear unit, see diagram for particular size of the linear unit. For travel speed and acceleration over the stated value in the table above or diagrams please contact us.*

[2] *For the ball nut with the preload of 2%, please contact us.*

[3] *With SA or 2LR version the max. rotation speed is limited to 3000 rev / min.*

[4] *For minimum stroke below the stated value in the table above please contact us.*

[5] *In the case of 2RL version the axial load is total axial load of both carriages.*

TECHNICAL DATA

Mass, moved mass, mass moment of inertia and no load torque

Linear Unit	Ball screw [d × l]	Number of SA n_{SA}	* Mass of linear unit [kg]	* Moved mass [kg]
MTV 80	20 × 5	0	8,2 + 0,0114 × (Abs. stroke + (nc - 1) × A) + 3,0 × (nc - 1)	3,00 + 3,00 × (nc - 1)
		2	8,9 + 0,0114 × (Abs. stroke + (nc - 1) × A) + 3,0 × (nc - 1)	3,07 + 3,00 × (nc - 1)
		4 / 6 / 8 / 10	9,7 + 0,4 * (n_{SA} - 4) + 0,0114 × (Abs. stroke + (nc - 1) × A) + 3,0 × (nc - 1)	3,21 + 0,035 * (n_{SA} - 4) + 3,00 × (nc - 1)
	20 × 5 2LR version	0	14,6 + 0,0228 × (Abs. stroke + (nc - 1) × A) + 6,0 × (nc - 1)	6,00 + 6,00 × (nc - 1)
		2	15,9 + 0,0228 × (Abs. stroke + (nc - 1) × A) + 6,0 × (nc - 1)	6,14 + 6,00 × (nc - 1)
		4 / 6 / 8 / 10	17,6 + 0,8 * (n_{SA} - 4) + 0,0228 × (Abs. stroke + (nc - 1) × A) + 6,0 × (nc - 1)	6,42 + 0,07 * (n_{SA} - 4) + 6,00 × (nc - 1)
	20 × 10	0	8,2 + 0,0114 × (Abs. stroke + (nc - 1) × A) + 3,0 × (nc - 1)	3,00 + 3,00 × (nc - 1)
		2	8,9 + 0,0114 × (Abs. stroke + (nc - 1) × A) + 3,0 × (nc - 1)	3,07 + 3,00 × (nc - 1)
		4 / 6 / 8 / 10	9,7 + 0,4 * (n_{SA} - 4) + 0,0114 × (Abs. stroke + (nc - 1) × A) + 3,0 × (nc - 1)	3,21 + 0,035 * (n_{SA} - 4) + 3,00 × (nc - 1)
	20 × 20	0	8,2 + 0,0114 × (Abs. stroke + (nc - 1) × A) + 3,0 × (nc - 1)	3,00 + 3,00 × (nc - 1)
		2	8,9 + 0,0114 × (Abs. stroke + (nc - 1) × A) + 3,0 × (nc - 1)	3,07 + 3,00 × (nc - 1)
		4 / 6 / 8 / 10	9,7 + 0,4 * (n_{SA} - 4) + 0,0114 × (Abs. stroke + (nc - 1) × A) + 3,0 × (nc - 1)	3,21 + 0,035 * (n_{SA} - 4) + 3,00 × (nc - 1)
	20 × 50	0	8,2 + 0,0114 × (Abs. stroke + (nc - 1) × A) + 3,0 × (nc - 1)	3,00 + 3,00 × (nc - 1)
		2	8,9 + 0,0114 × (Abs. stroke + (nc - 1) × A) + 3,0 × (nc - 1)	3,07 + 3,00 × (nc - 1)
		4 / 6 / 8 / 10	9,7 + 0,4 * (n_{SA} - 4) + 0,0114 × (Abs. stroke + (nc - 1) × A) + 3,0 × (nc - 1)	3,21 + 0,035 * (n_{SA} - 4) + 3,00 × (nc - 1)

Linear Unit	Ball screw [d × l]	Number of SA n_{SA}	* Mass moment of inertia [10^{-5} kg m^2]	* ** No load torque [Nm]
MTV 80	20 × 5	0	5,6 + 0,0127 × (Abs. stroke + (nc - 1) × A) + 0,19 × (nc - 1)	0,23 + 0,23 × (nc - 1)
		2	6,2 + 0,0127 × (Abs. stroke + (nc - 1) × A) + 0,19 × (nc - 1)	0,26 + 0,23 × (nc - 1)
		4 / 6 / 8 / 10	7,0 + 0,4 * (n_{SA} - 4) + 0,0127 × (Abs. stroke + (nc - 1) × A) + 0,19 × (nc - 1)	0,31 + 0,015 * (n_{SA} - 4) + 0,23 × (nc - 1)
	20 × 5 2LR version	0	9,5 + 0,0254 × (Abs. stroke + (nc - 1) × A) + 0,38 × (nc - 1)	0,46 + 0,46 × (nc - 1)
		2	10,7 + 0,0254 × (Abs. stroke + (nc - 1) × A) + 0,38 × (nc - 1)	0,51 + 0,46 × (nc - 1)
		4 / 6 / 8 / 10	12,3 + 0,8 * (n_{SA} - 4) + 0,0254 × (Abs. stroke + (nc - 1) × A) + 0,38 × (nc - 1)	0,62 + 0,03 * (n_{SA} - 4) + 0,46 × (nc - 1)
	20 × 10	0	6,2 + 0,0127 × (Abs. stroke + (nc - 1) × A) + 0,76 × (nc - 1)	0,25 + 0,25 × (nc - 1)
		2	6,8 + 0,0127 × (Abs. stroke + (nc - 1) × A) + 0,76 × (nc - 1)	0,30 + 0,25 × (nc - 1)
		4 / 6 / 8 / 10	7,6 + 0,4 * (n_{SA} - 4) + 0,0127 × (Abs. stroke + (nc - 1) × A) + 0,76 × (nc - 1)	0,41 + 0,025 * (n_{SA} - 4) + 0,25 × (nc - 1)
	20 × 20	0	8,5 + 0,0127 × (Abs. stroke + (nc - 1) × A) + 3,04 × (nc - 1)	0,30 + 0,30 × (nc - 1)
		2	9,1 + 0,0127 × (Abs. stroke + (nc - 1) × A) + 3,04 × (nc - 1)	0,41 + 0,30 × (nc - 1)
		4 / 6 / 8 / 10	10,1 + 0,5 * (n_{SA} - 4) + 0,0127 × (Abs. stroke + (nc - 1) × A) + 3,04 × (nc - 1)	0,62 + 0,055 * (n_{SA} - 4) + 0,30 × (nc - 1)
	20 × 50	0	24,4 + 0,0127 × (Abs. stroke + (nc - 1) × A) + 19,00 × (nc - 1)	0,70 + 0,70 × (nc - 1)
		2	25,5 + 0,0127 × (Abs. stroke + (nc - 1) × A) + 19,00 × (nc - 1)	0,97 + 0,70 × (nc - 1)
		4 / 6 / 8 / 10	27,1 + 0,6 * (n_{SA} - 4) + 0,0127 × (Abs. stroke + (nc - 1) × A) + 19,00 × (nc - 1)	1,50 + 0,135 * (n_{SA} - 4) + 0,70 × (nc - 1)

*Absolute stroke [mm]
A - Distance between carriages [mm]. More info on following pages.
nc - Number of carriages

**The stated values are for strokes (and for distances between the carriages A) up to 500mm.
No Load Torque value increases with stroke (and with A) elongation.

Mass calculation doesn´t include mass of motor, reduction gear, switches and clamps.

Planar moment of inertia

Linear Unit	Planar moment of inertia	
	I_y [cm^4]	I_z [cm^4]
MTV 80 MTV 80 2LR	144,1	192,3

In order to improve the products in this catalogue the specifications are subject to change without notice.

TECHNICAL DATA

Deflection of the linear unit

Fixed - fixed mounting

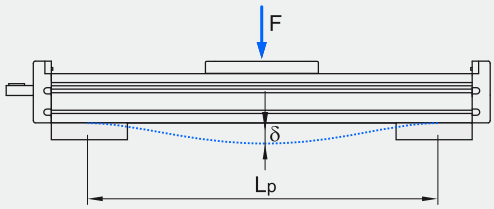

Fixed - free mounting

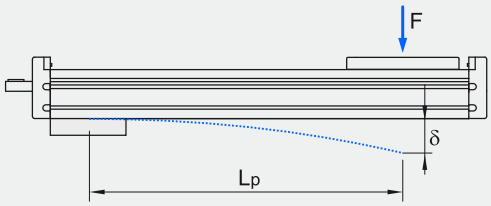

δ Maximum deflection of the linear unit [mm]
δmax Maximum permissible deflection of the linear unit [mm]
F Applied force [N]
Lp Unsupported profile length [mm]

The maximum permissible deflection δmax must not be exceeded. In the case that maximum deflection δ exceeds the maximum permissible deflection δmax additional profile supports are needed.

MTV 80

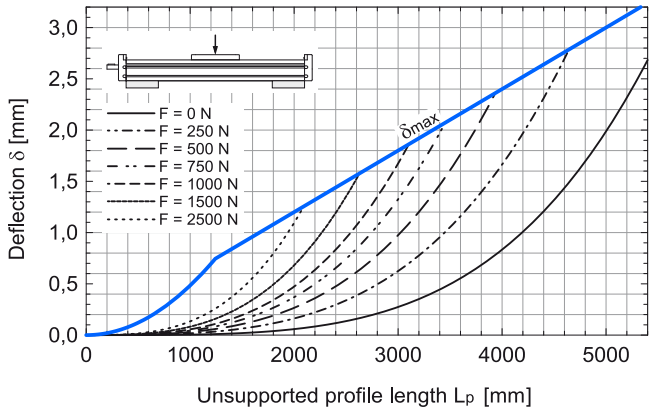

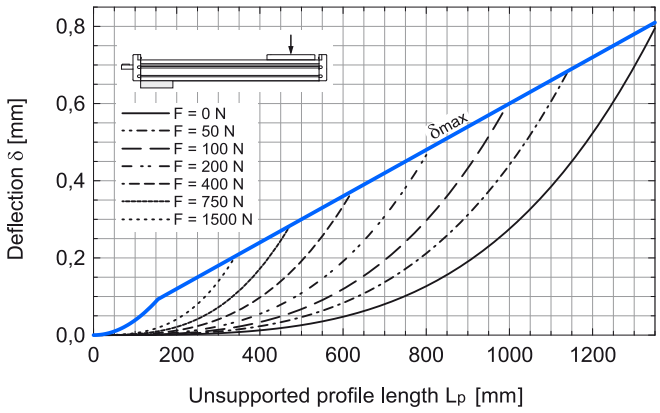

Maximum travel speed as a function of the profile length (Vmax - L curves)

MTV 80

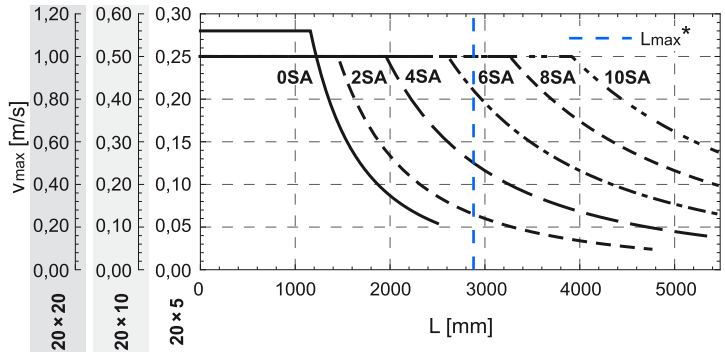

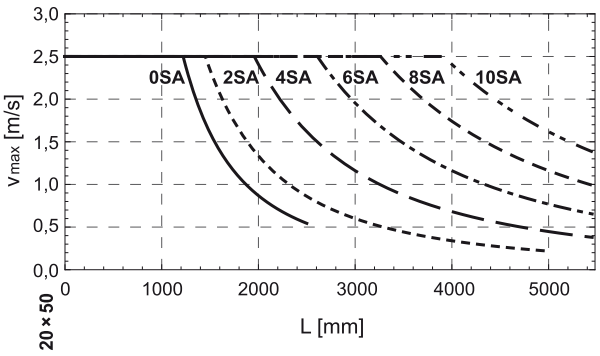

* Max. length Lmax of MTV 80 linear unit with 20x10 ball screw.

TECHNICAL DATA

Deflection of the 2LR version

Fixed - fixed mounting

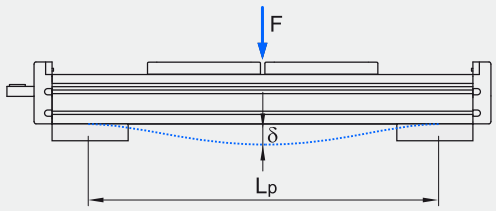

δ Maximum deflection of the linear unit [mm]
δmax Maximum permissible deflection of the linear unit [mm]
F Applied force [N]
Lp Unsupported profile length [mm]

The maximum permissible deflection δmax must not be exceeded. In the case that maximum deflection δ exceeds the maximum permissible deflection δmax additional profile supports are needed.

MTV 80 2LR

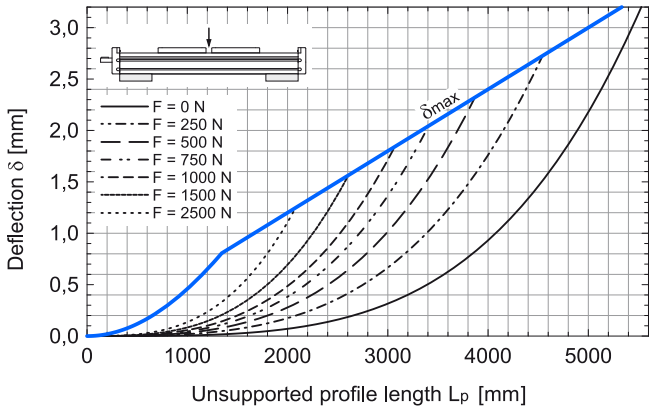

Maximum travel speed as a function of the profile length (Vmax - L curves)

MTV 80 2LR

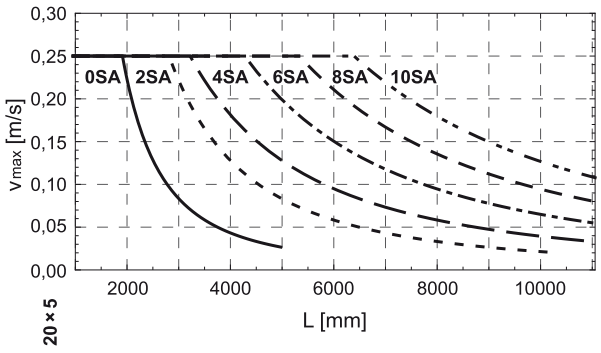

In order to improve the products in this catalogue the specifications are subject to change without notice.

DIMENSIONS

Linear Unit doesn't include any safety

Absolute stroke = Effective stroke + 2 x Safety stroke stroke.

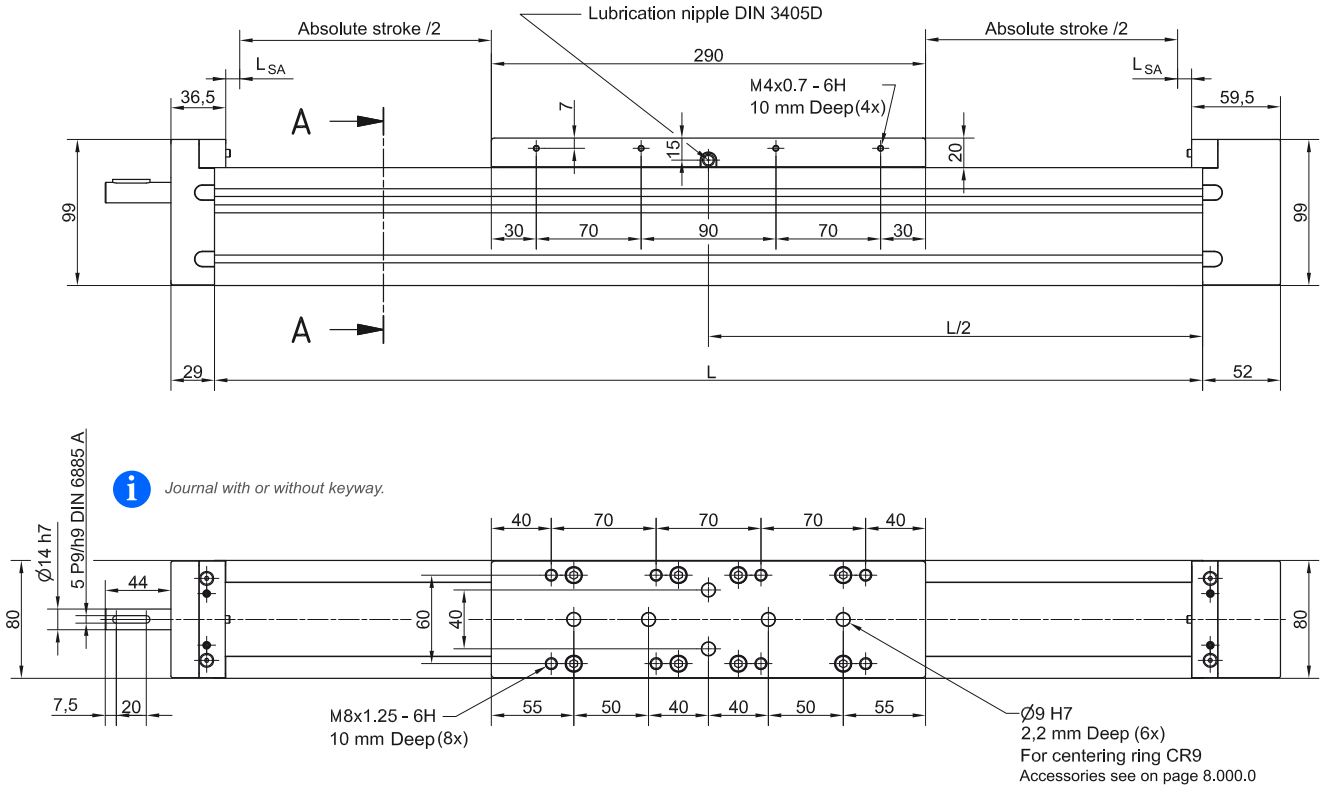

n_{SA}	L_{SA}
0	6,0
2SA	28,5
4SA	59,5
6SA	90,5
8SA	121,5
10SA	152,5

L_{SA} Additional length [mm]

All dimensions in mm;
Drawings scales are not equal.

2LR Version

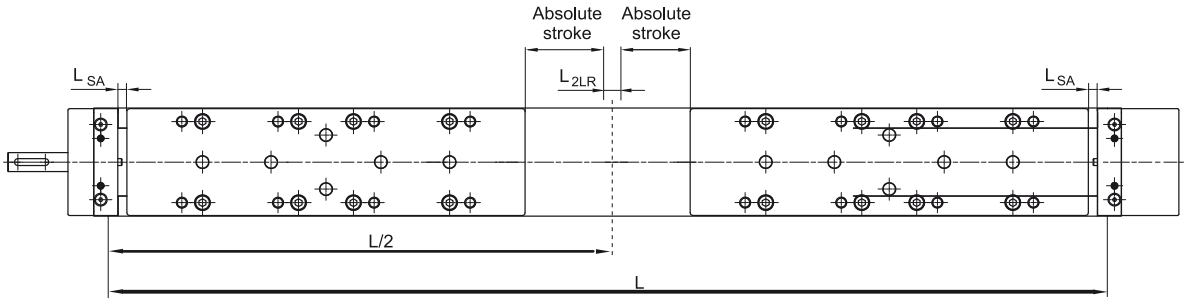

n_{SA}	L_{SA}	L_{2LR}
0	6,0	0,0
2SA	28,5	48,0
4SA	59,5	110,0
6SA	90,5	172,0
8SA	121,5	234,0
10SA	152,5	296,0

L_{SA} Additional length [mm]

L_{2LR} Min. distance between carriages [mm]

DIMENSIONS

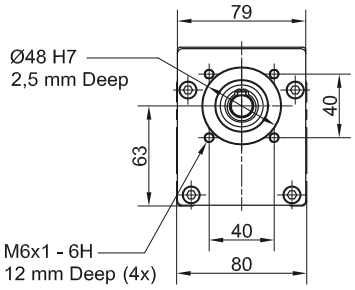

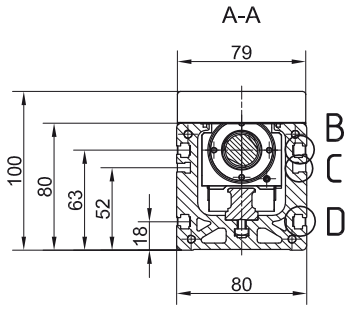

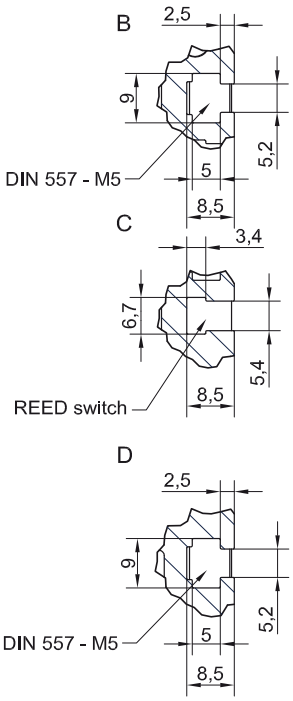

All dimensions in mm.
Drawings scales are not equal.

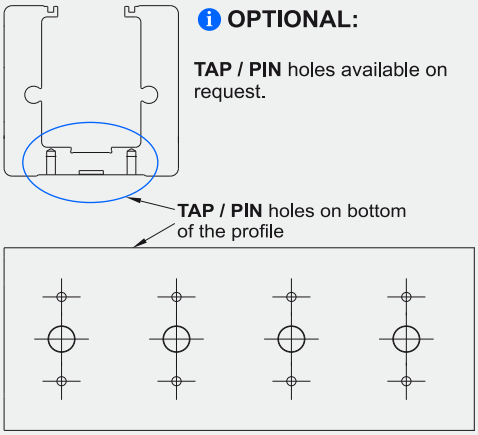

Drawing only for presentational use.

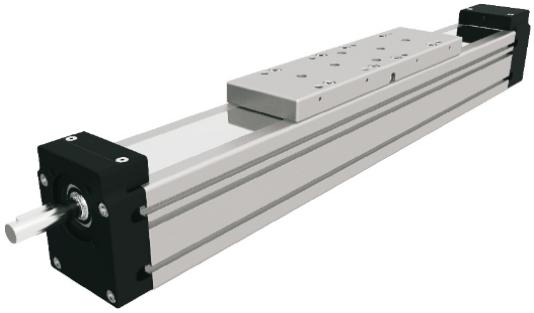

Mounting the drive

- by the **MOTOR SIDE DRIVE - MSD** *(Page 7.095.0)*
- by the **MOTOR ADAPTER WITH COUPLING** *(Page 8.020.0)*

Available on request.

Defining of the linear unit length

Standard version

L = Effective stroke + 2 × Safety stroke + Lv + 2 × LSA + A × (nc - 1) + 15 mm

Ltotal = L + 81 mm, Lv = 290 mm

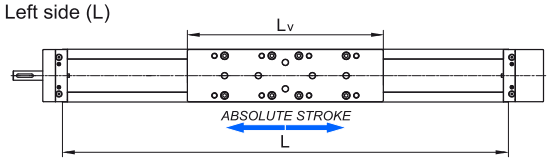

Multiple carriages

A ≥ Lv *Connection between the carriages must be provided by the customer*

nc - Number of carriages

2LR version

L = 2 × (Effective stroke + 2 × Safety stroke) + 2 × Lv + 2 × LSA + L2LR + A × (nc - 1) + 15 mm

Ltotal = L + 81 mm, Lv = 290 mm

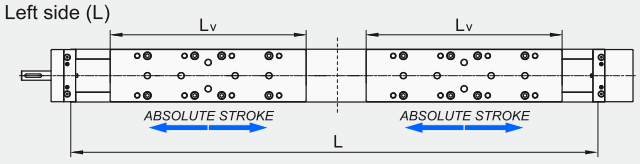

Multiple carriages

A ≥ Lv *Connection between the carriages must be provided by the customer*

nc - Number of carriages

In order to improve the products in this catalogue the specifications are subject to change without notice.

TECHNICAL DATA

General technical data

Linear Unit	Carriage length Lv [mm]	Dynamic Load capacity C [N]	Dynamic moment Mx [Nm]	My [Nm]	Mz [Nm]	Max. permissible loads Forces Fpy [N]	Fpz [N]	Moments Mpx [Nm]	Mpy [Nm]	Mpz [Nm]	* Max. length Lmax [mm]	* Max. stroke [mm]
MTV 110	330	49600	630	2650	2650	10000	20260	295	670	535	5850	5456

*For lengths / stroke over the stated value in the table above please contact us.
Values for max. stroke are not valid for multiple carriages and screw support SA
(equation of defining the linear unit length for particular size of the linear unit needs to be used).

Operating conditions	
Operating temp.	0°C ~ +60°C
Duty cycle	100%

For operating temperature out of the presented range, please contact us.

Recommended values of loads:

All the data of dynamic moments and load capacities stated in the upper table are theoretical without considering any safety factor. The safety factor depends on the application and its requested safety. We recommend a minimum safety factor (fs =5.0)

Modulus of elasticity

$E = 70000\ N / mm^2$

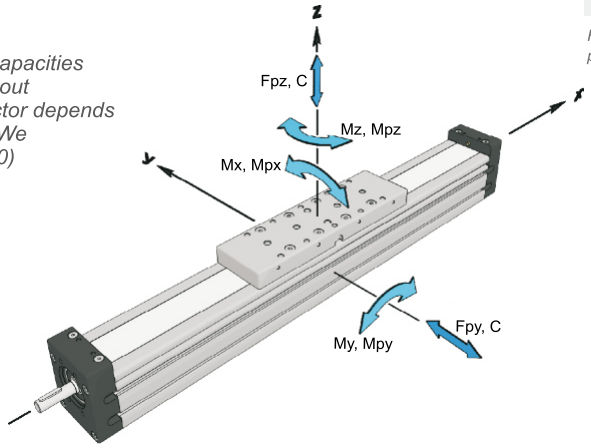

General technical data for double carriage

Linear Unit	Number of carriages	Dynamic Load capacity C [N]	* Dynamic moment Mx [Nm]	My [Nm]	Mz [Nm]	* Max. permissible loads Forces Fpy [N]	Fpz [N]	Moments Mpx [Nm]	Mpy [Nm]	Mpz [Nm]
MTV 110	2	99200	1260	49,6 × A	49,6 × A	20000	40500	590	20,3 × A	10,0 × A

*A - Distance between carriages [mm]. More info on following pages.

Presented values are for informational purposes only. Exact values can be calculated using our sizing selection tool on Unimotion web site.

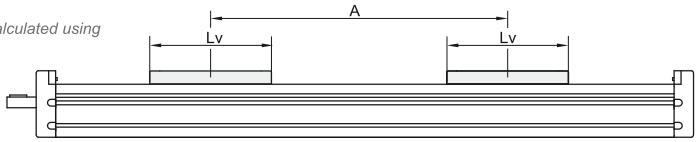

Ball Screw Drive data

Linear Unit	Ball screw [d × l]	[3] Max. rotational speed (Without SA) [rev / min]	[1] Max. travel speed (Without SA) [m / s]	Lead constant [mm / rev]	[2] Max. Repeatability precision [mm] STANDARD ISO7	ISO5	Dynamic load capacity BS Ca [N]	Max. axial load Fx [N]	Max. drive torque Ma [Nm]	[4] Min. stroke [mm]	[1] Max. acceleration [m/s^2]
MTV 110	32 × 5	2150	0,18	5	± 0,02	± 0,01	18850	18850	16,7 with Keyway 16,7 without Keyway	65	20
	32 × 10	3000	0,50	10	± 0,02	± 0,01	37000	29600	27,3 with Keyway 52,3 without Keyway		
	32 × 20		1,00	20	± 0,02	± 0,01	22950	14800			
	32 × 32		1,60	32	± 0,02	± 0,01	15500	9240		70	

[1] *Max. travel speed depends of the length of the linear unit, see diagram for particular size of the linear unit. For travel speed and acceleration over the stated value in the table above or diagrams please contact us.*

[2] *For the ball nut with the preload of 2%, please contact us.*

[3] *With SA the max. rotation speed is limited to 3000 rev / min.*

[4] *For minimum stroke below the stated value in the table above please contact us.*

Planar moment of inertia

Linear Unit	Planar moment of inertia Iy [cm^4]	Iz [cm^4]
MTV 110	562,0	669,0

TECHNICAL DATA

Mass, moved mass, mass moment of inertia and no load torque

Linear Unit	Ball screw [d × l]	Number of SA n_{SA}	* Mass of linear unit [kg]	* Moved mass [kg]
MTV 110	32 × 5	0	17,3 + 0,0216 × (Abs. stroke + (nc - 1) × A) + 4,9 × (nc - 1)	4,90 + 4,90 × (nc - 1)
		2	17,7 + 0,0216 × (Abs. stroke + (nc - 1) × A) + 4,9 × (nc - 1)	5,03 + 4,90 × (nc - 1)
		4 / 6 / 8 / 10	19,3 + 0,8 * (n_{SA} - 4) + 0,0216 × (Abs. stroke + (nc - 1) × A) + 4,9 × (nc - 1)	5,29 + 0,065 * (n_{SA} - 4) + 4,90 × (nc - 1)
	32 × 10	0	17,3 + 0,0216 × (Abs. stroke + (nc - 1) × A) + 4,9 × (nc - 1)	4,90 + 4,90 × (nc - 1)
		2	17,7 + 0,0216 × (Abs. stroke + (nc - 1) × A) + 4,9 × (nc - 1)	5,03 + 4,90 × (nc - 1)
		4 / 6 / 8 / 10	19,3 + 0,8 * (n_{SA} - 4) + 0,0216 × (Abs. stroke + (nc - 1) × A) + 4,9 × (nc - 1)	5,29 + 0,065 * (n_{SA} - 4) + 4,90 × (nc - 1)
	32 × 20	0	17,3 + 0,0216 × (Abs. stroke + (nc - 1) × A) + 4,9 × (nc - 1)	4,90 + 4,90 × (nc - 1)
		2	17,7 + 0,0216 × (Abs. stroke + (nc - 1) × A) + 4,9 × (nc - 1)	5,03 + 4,90 × (nc - 1)
		4 / 6 / 8 / 10	19,3 + 0,8 * (n_{SA} - 4) + 0,0216 × (Abs. stroke + (nc - 1) × A) + 4,9 × (nc - 1)	5,29 + 0,065 * (n_{SA} - 4) + 4,90 × (nc - 1)
	32 × 32	0	17,3 + 0,0216 × (Abs. stroke + (nc - 1) × A) + 4,9 × (nc - 1)	4,90 + 4,90 × (nc - 1)
		2	17,7 + 0,0216 × (Abs. stroke + (nc - 1) × A) + 4,9 × (nc - 1)	5,03 + 4,90 × (nc - 1)
		4 / 6 / 8 / 10	19,3 + 0,8 * (n_{SA} - 4) + 0,0216 × (Abs. stroke + (nc - 1) × A) + 4,9 × (nc - 1)	5,29 + 0,065 * (n_{SA} - 4) + 4,90 × (nc - 1)

Linear Unit	Ball screw [d × l]	Number of SA n_{SA}	* Mass moment of inertia [10^{-5} kg m^2]	** No load torque [Nm]
MTV 110	32 × 5	0	34,6 + 0,0690 × (Abs. stroke + (nc - 1) × A) + 0,31 × (nc - 1)	0,60 + 0,60 × (nc - 1)
		2	35,1 + 0,0690 × (Abs. stroke + (nc - 1) × A) + 0,31 × (nc - 1)	0,67 + 0,60 × (nc - 1)
		4 / 6 / 8 / 10	39,4 + 2,2 * (n_{SA} - 4) + 0,0690 × (Abs. stroke + (nc - 1) × A) + 0,31 × (nc - 1)	0,81 + 0,035 * (n_{SA} - 4) + 0,60 × (nc - 1)
	32 × 10	0	35,5 + 0,0690 × (Abs. stroke + (nc - 1) × A) + 1,24 × (nc - 1)	0,70 + 0,70 × (nc - 1)
		2	36,1 + 0,0690 × (Abs. stroke + (nc - 1) × A) + 1,24 × (nc - 1)	0,84 + 0,70 × (nc - 1)
		4 / 6 / 8 / 10	40,4 + 2,2 * (n_{SA} - 4) + 0,0690 × (Abs. stroke + (nc - 1) × A) + 1,24 × (nc - 1)	1,12 + 0,070 * (n_{SA} - 4) + 0,70 × (nc - 1)
	32 × 20	0	39,3 + 0,0690 × (Abs. stroke + (nc - 1) × A) + 4,96 × (nc - 1)	0,75 + 0,75 × (nc - 1)
		2	39,9 + 0,0690 × (Abs. stroke + (nc - 1) × A) + 4,96 × (nc - 1)	1,03 + 0,75 × (nc - 1)
		4 / 6 / 8 / 10	44,4 + 2,2 * (n_{SA} - 4) + 0,0690 × (Abs. stroke + (nc - 1) × A) + 4,96 × (nc - 1)	1,60 + 0,140 * (n_{SA} - 4) + 0,75 × (nc - 1)
	32 × 32	0	47,0 + 0,0690 × (Abs. stroke + (nc - 1) × A) + 12,71 × (nc - 1)	0,80 + 0,80 × (nc - 1)
		2	47,8 + 0,0690 × (Abs. stroke + (nc - 1) × A) + 12,71 × (nc - 1)	1,25 + 0,80 × (nc - 1)
		4 / 6 / 8 / 10	52,8 + 2,3 * (n_{SA} - 4) + 0,0690 × (Abs. stroke + (nc - 1) × A) + 12,71 × (nc - 1)	2,16 + 0,225 * (n_{SA} - 4) + 0,80 × (nc - 1)

Absolute stroke [mm]
A - Distance between carriages [mm]. More info on following pages.
nc - Number of carriages

**The stated values are for strokes (and for distances between the carriages A) up to 500mm.*
No Load Torque value increases with stroke (and with A) elongation.

Mass calculation doesn´t include mass of motor, reduction gear, switches and clamps.

Deflection of the linear unit

Fixed - fixed mounting

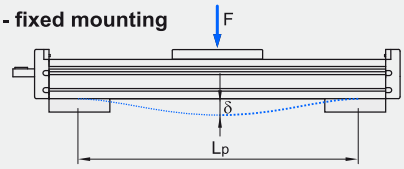

Fixed - free mounting

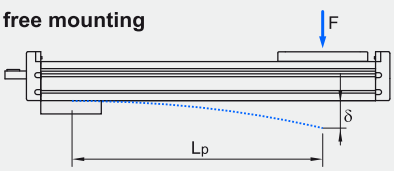

δ Maximum deflection of the linear unit [mm]
δmax Maximum permissible deflection of the linear unit [mm]
F Applied force [N]
Lp Unsupported profile length [mm]

The maximum permissible deflection δmax must not be exceeded. In the case that maximum deflection δ exceeds the maximum permissible deflection δmax additional profile supports are needed.

MTV 110

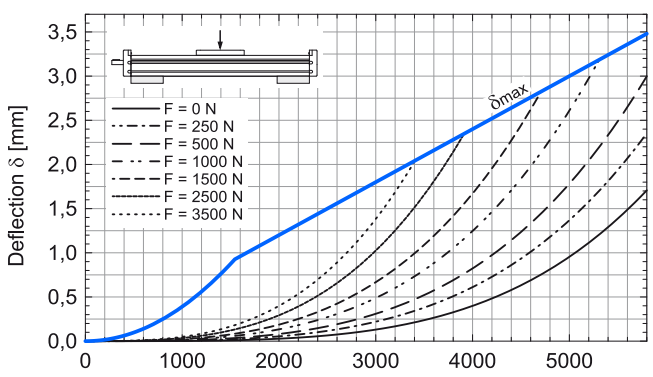

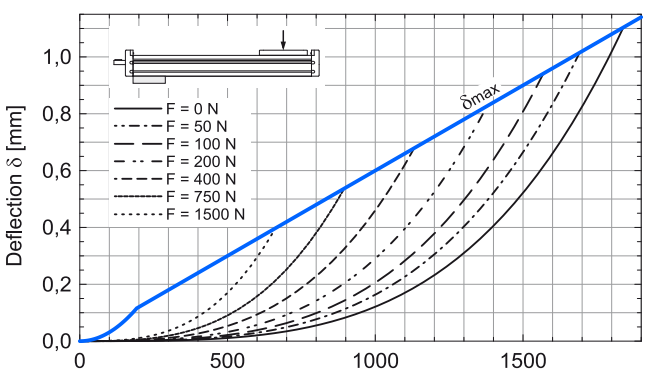

In order to improve the products in this catalogue the specifications are subject to change without notice.

DIMENSIONS

Linear Unit doesn't include any safety
Absolute stroke = Effective stroke + 2 x Safety stroke stroke.

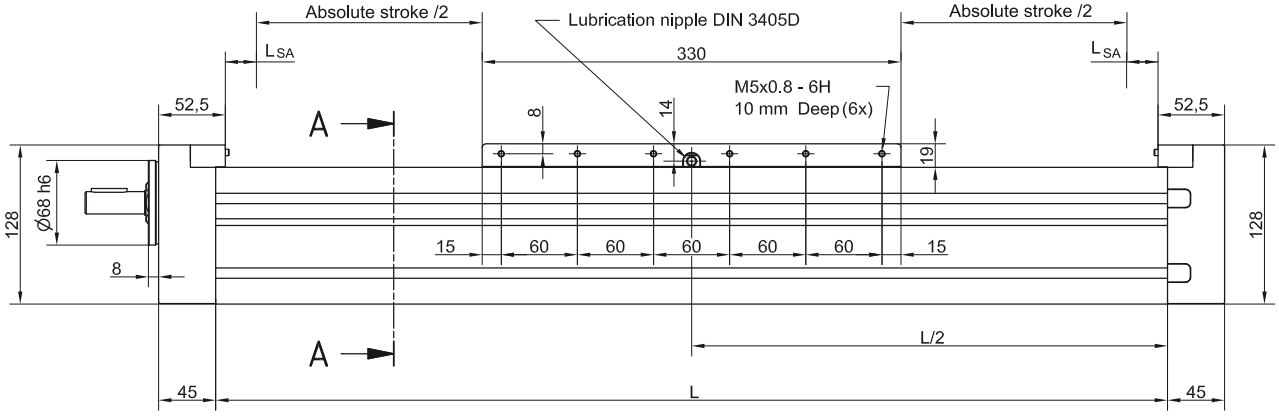

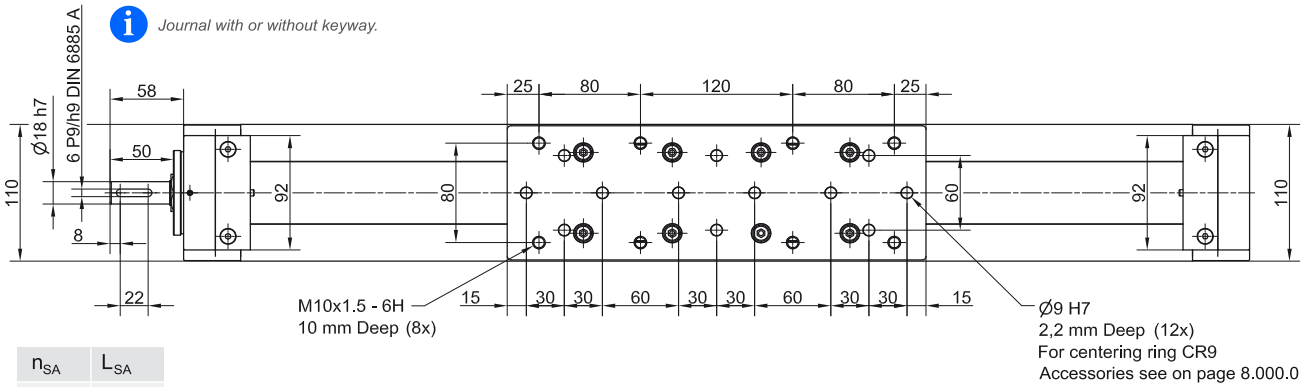

Accessories see on page 8.000.0

n_{SA}	L_{SA}
0	24,5
2SA	28,0
4SA	59,0
6SA	90,0
8SA	121,0
10SA	152,0

All dimensions in mm;
Drawings scales are not equal.

L_{SA} Additional length [mm]

Defining of the linear unit length

L = Effective stroke + 2 × Safety stroke + Lv + 2 × L_{SA} + A × (n_c - 1) + 15 mm

Ltotal = L + 90 mm, Lv = 330 mm

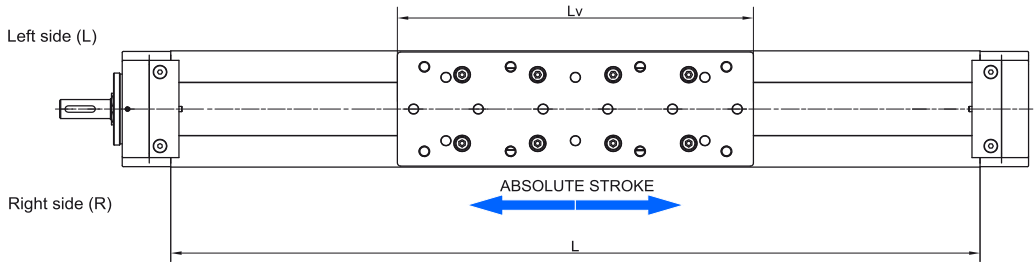

Multiple carriages

A ≥ Lv *Connection between the carriages must be provided by the customer*

n_c - Number of carriages

DIMENSIONS

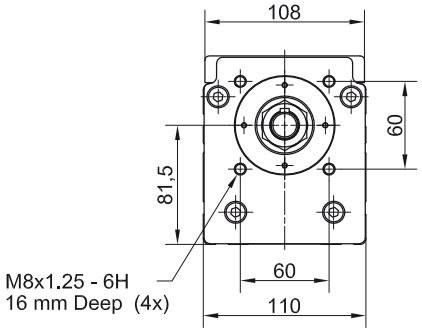

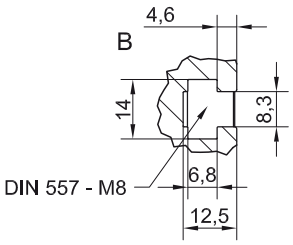

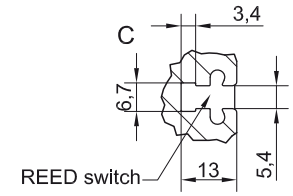

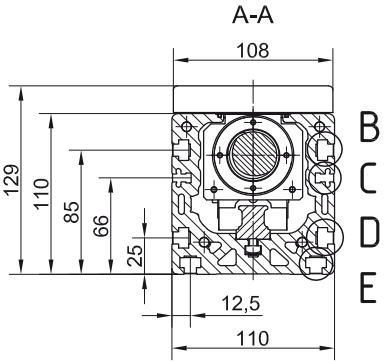

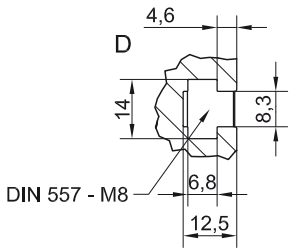

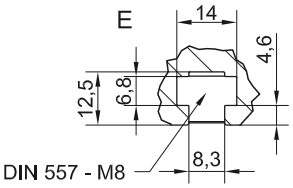

All dimensions in mm.
Drawings scales are not equal.

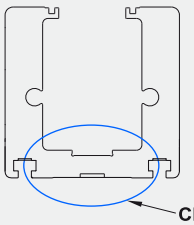

OPTIONAL:

CENTER RING holes available on request.

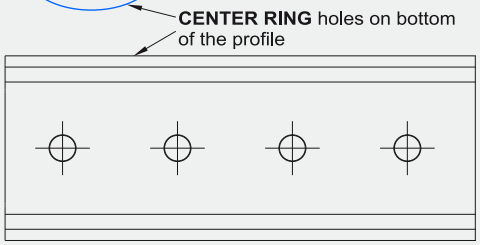

Drawing only for presentational use.

Mounting the drive

- by the **MOTOR SIDE DRIVE - MSD** *(Page 7.095.0)*
- by the **MOTOR ADAPTER WITH COUPLING** *(Page 8.020.0)*

Available on request.

Maximum travel speed as a function of the profile length (Vmax - L curves)

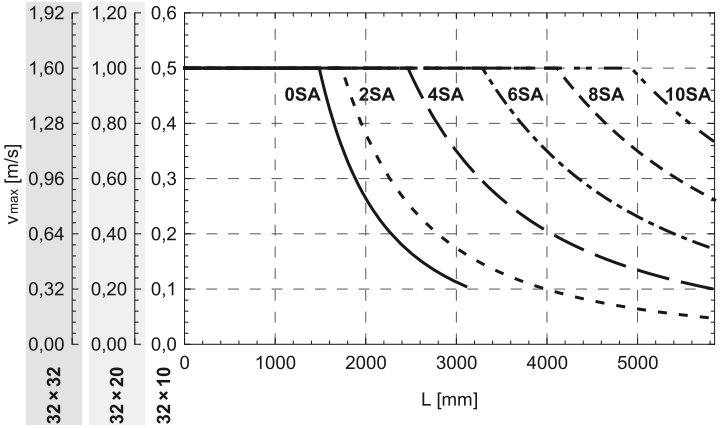

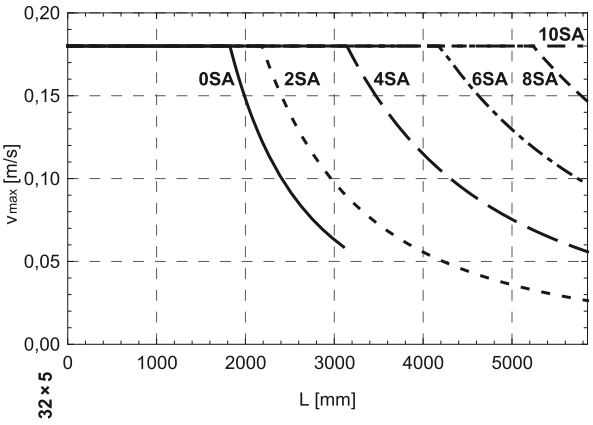

In order to improve the products in this catalogue the specifications are subject to change without notice.