Tensioning Rollers / Idlers TS for Belt Drives

Material: Aluminium, one-piece, with turned flanges.
Distance bushes and ball bearings from steel.

Tensioning Rollers / Idlers are used on the outside of the belt (back of belt). Mounted on a suitable tensioning element, the tensioning roller becomes a ready-to-mount belt tensioner or, on its own, it can be used as an idler. It runs on permanently lubricated 2Z ball bearings. One loose, zinc-plated distance bush is included in the delivery (in the drawing on the right side). Support, screw set and tensioning element have to be ordered separately.

Ordering Details: e.g.: Product No. 140 882 01, Tensioning Roller TS 20-8

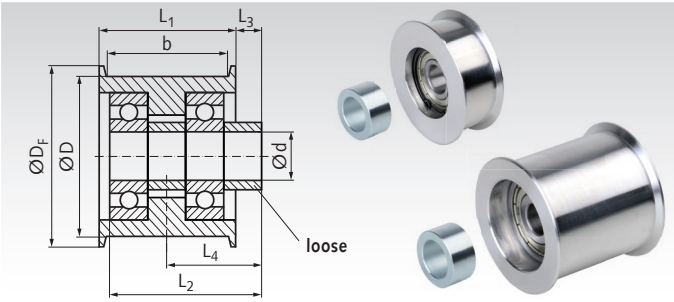

Product No.	Type	D mm	b mm	d mm	D_F mm	L_1 mm	L_2 mm	L_3 mm	L_4 mm	Ball Bearing	Weight g	Product No. additional Bush	d_B x D_B x L_B mm	Weight g
140 882 01	TS 20-8	20	8	5	25	11	10	2	7,5	1 x 625-2Z	12	**140 805 05**	5x10x5	2,3
140 882 02	TS 20-13	20	13	5	25	16	20	4,5	12,5	2 x 625-2Z	22	**140 805 05**	5x10x5	2,3
140 883 01	TS 30-13	30	13	8	35	16	14	2,5	10,5	1 x 608-2Z	32	**140 808 07**	8x13x7	4,5
140 883 02	TS 30-19	30	19	8	35	22	28	6,5	17,5	2 x 608-2Z	58	**140 808 07**	8x13x7	4,5
140 883 03	TS 30-28	30	28	8	35	32	28	1,5	17,5	2 x 608-2Z	64	**140 808 07**	8x13x7	4,5
140 884 01	TS 40-14	40	14	10	45	17	18	5	13,5	1 x 6200-2Z	74	**140 810 09**	10x17x9	10,5
140 884 02	TS 40-23	40	23	10	45	27	36	9	22,5	2 x 6200-2Z	138	**140 810 09**	10x17x9	10,5
140 884 03	TS 40-28	40	28	10	45	32	36	6,5	22,5	2 x 6200-2Z	146	**140 810 09**	10x17x9	10,5
140 884 04	TS 40-38	40	38	10	45	42	36	1,5	22,5	2 x 6200-2Z	162	**140 810 09**	10x17x9	10,5
140 886 01	TS 60-19	60	19	12	68	23	24	6,5	18	1 x 6301-2Z	206	**140 812 12**	12x20x12	18,9
140 886 02	TS 60-31	60	31	12	68	36	48	12	30	2 x 6301-2Z	366	**140 812 12**	12x20x12	18,9
140 886 03	TS 60-38	60	38	12	68	43	48	8,5	30	2 x 6301-2Z	402	**140 812 12**	12x20x12	18,9
140 886 04	TS 60-54	60	54	12	68	60	60	6	36	2 x 6301-2Z	530	**140 812 12**	12x20x12	18,9
140 888 01	TS 80-28	80	28	20	90	33	30	6	22,5	1 x 6304-2Z	500	**140 820 15**	20x30x15	46,2
140 888 02	TS 80-40	80	40	20	90	45	60	15	37,5	2 x 6304-2Z	820	**140 820 15**	20x30x15	46,2
140 888 03	TS 80-54	80	54	20	90	60	60	7,5	37,5	2 x 6304-2Z	940	**140 820 15**	20x30x15	46,2
140 889 01	TS 120-28	120	28	20	130	34	39,5	5,5	22,5	1 x 6304-2Z	1110	**140 820 15**	20x30x15	46,2
140 889 02	TS 120-36	120	36	20	130	42	50	9	30,0	2 x 6304-2Z	1490	**140 820 10**	20x30x10	30,8
140 889 03	TS 120-44	120	44	20	130	50	60	12,5	37,5	2 x 6304-2Z	1740	**140 820 15**	20x30x15	46,2
140 889 04	TS 120-54	120	54	20	130	62	60	6,5	37,5	2 x 6304-2Z	2060	**140 820 15**	20x30x15	46,2

Distance Bushes for Tensioning Rollers / Idlers TS

Material: Steel, zinc-plated.

As spare part or as an additional distance bush for double-sided mounting.

Ordering Details: e.g.: Product No. 140 805 05, Distance Bush 5 x 10 x 5 mm

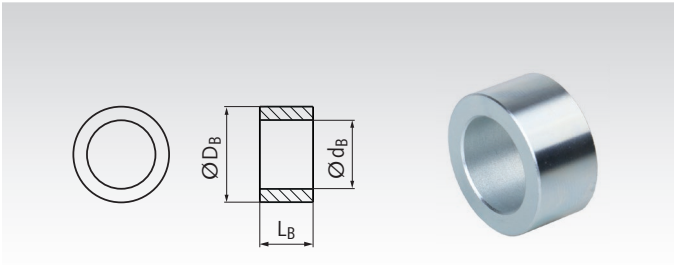

Product No.	d_B mm	D_B mm	L_B mm	Weight g
140 805 05	5	10	5	2,3
140 808 07	8	13	7	4,5
140 810 09	10	17	9	10,5
140 812 12	12	20	12	18,9
140 812 24	12	20	24	37,9
140 820 10	20	30	10	30,8
140 820 15	20	30	15	46,2

Supports for Idlers or Tensioning Elements

Material: Steel, blue painted.

This support enables an easy mounting of an idler wheel / tensioning roller or a tensioning element to the machine. The hole A is for fastening the tensioner with it´s central screw. The mounting can be done at the front side or back side of the support. For any other purposes, the both holes B can be used to fix other parts instead of a tensioner.

Ordering Details: e.g.: Product No. 140 800 01, Support Size 0

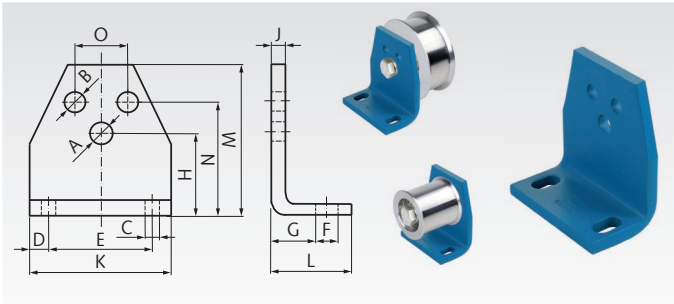

Product No.	Size	A mm	B mm	C mm	D mm	E mm	F mm	G mm	H mm	J mm	K mm	L mm	M mm	N mm	O mm	Weight kg
140 800 01	0	6,5	5,5	7	7,5	30	13	11,5	27	4	45	30	46	35	10	0,08
140 801 01	1	8,5	6,5	7	7,5	40	13	13,5	34	5	55	32	58	44	12	0,15
140 802 01	2	10,5	8,5	9,5	10	50	15,5	16,5	43	6	70	38	74	55	20	0,30
140 803 01	3	12,5	10,5	11,5	12,5	65	21,5	21	57	8	90	52	98	75	25	0,66
140 804 01	4	16,5	12,5	14	15	80	24	21	66	8	110	55	116	85	35	0,94
140 804 02	4	20,5	12,5	14	15	80	24	21	66	8	110	55	116	85	35	0,94

Screw Sets for Tensioning Rollers / Idlers TS

Material: Steel, zinc-plated. Screw strength 8.8, nuts strength class 8.

The set consists of one screw ISO 4017 / DIN 933, one normal nut DIN 934 and two thin nuts DIN 936.

For mounting a tensioning roller TS at a tensioning element, at a support or at a customer´s mounting surface. The alignment can be adjusted (dimension R at our tensioning elements). Tensioning roller TS, screw set and and tensioning element have to be ordered separately.

Ordering Details: e.g.: Product No. 140 905 035, Screw Set M5 x 35

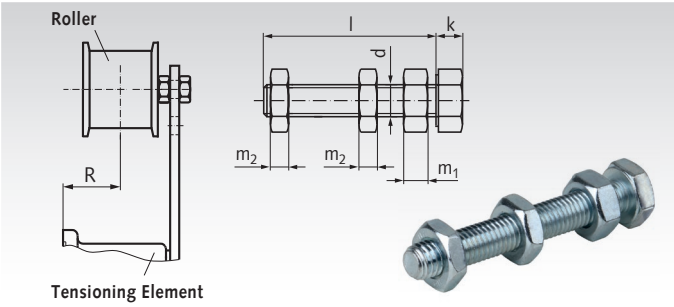

For Tens. Roller	Product No. Screw set	for Prod. No. Tens. Roller	with Product No. Tens. Element	Size	d mm	l mm	k mm	m_1 mm	m_2 mm	R_{min} mm	R_{max} mm	Weight g
TS 20-8	**140 905 035**[1)]	140 882 01	-	-	M5	35	3,5	4	4	-	-	8,0
TS 20-13	**140 905 040**[1)2)]	140 882 02	-	-	M5	40	3,5	4	4	-	-	8,5
TS 30-13	**140 908 045**	140 883 01	140 800 00	0	M8	45	5,3	6,5	5	14,5	24,0	30
TS 30-19	**140 908 045**[2)]	140 883 02	140 800 00	0	M8	45	5,3	6,5	5	21,5[2)]	24,0[2)]	30
TS 30-28	**140 908 045**[2)]	140 883 03	140 800 00	0	M8	45	5,3	6,5	5	21,5[2)]	24,0[2)]	30
TS 40-14	**140 910 055**	140 884 01	140 801 00	1	M10	55	6,4	8	6	19,5	31,5	62
TS 40-23	**140 910 070**[2)]	140 884 02	140 802 00	2	M10	70	6,4	8	6	28,5	44,5[2)]	70
TS 40-28	**140 910 070**	140 884 03	140 802 00	2	M10	70	6,4	8	6	28,5	35,5	70
TS 40-38	**140 910 070**	140 884 04	140 802 00	2	M10	70	6,4	8	6	28,5	35,5	70
TS 60-19	**140 912 070**	140 886 01	140 802 12	2	M12	70	7,5	10	7	22,0	37,0	102
TS 60-31	**140 912 090**[2)]	140 886 02	140 803 00	3	M12	90	7,5	10	7	43,0	65,0[2)]	116
TS 60-38	**140 912 090**	140 886 03	140 803 00	3	M12	90	7,5	10	7	43,0	53,0	116
TS 60-54	**140 912 090**[2)]	140 886 04	140 803 00	3	M12	90	7,5	10	7	49,0	59,0[2)]	116
TS 80-28	**140 920 100**	140 888 01	140 804 00	4	M20	100	12,5	16	9	56,5	82,5	390
TS 80-40	**140 920 120**[2)]	140 888 02	140 804 00	4	M20	120	12,5	16	9	51,5	82,5[2)]	430
TS 80-54	**140 920 120**	140 888 03	140 804 00	4	M20	120	12,5	16	9	51,5	67,5	430
TS 120-28	**140 920 100**	140 889 01	140 804 00	4	M20	100	12,5	16	9	56,5	82,5	390
TS 120-36	**140 920 120**[2)]	140 889 02	140 804 00	4	M20	120	12,5	16	9	49,0	85,0[2)]	430
TS 120-44	**140 920 120**[2)]	140 889 03	140 804 00	4	M20	120	12,5	16	9	51,5	82,5[2)]	430
TS 120-54	**140 920 120**	140 889 04	140 804 00	4	M20	120	12,5	16	9	51,5	82,5	430

[1)] Screw M5 with 3 normal nuts DIN 934, for support size 0, product no. 14080001; adjusting range 9 mm.
[2)] Mounting without the loose distance bush, which is included in the delivery of the tensioning roller set.

Tensioning Elements

Material: Lever made from St52, housing up to Ø 78 mm made from sintered steel, over Ø 78 mm made from grey cast iron.

Tensioning elements are painted blue and are supplied with a zinc-plated screw and a spring washer.

These tensioning element can be used for tensioning all common kinds of belt and chain drives. The spring elements are based on highly-elastic natural rubber with a good shape memory and are designed for applications in temperatures from -40° to +80°C. Can be used for both tensioning directions.

Ordering Details: e.g.: Product No. 140 800 00, Tensioning Element Size 0

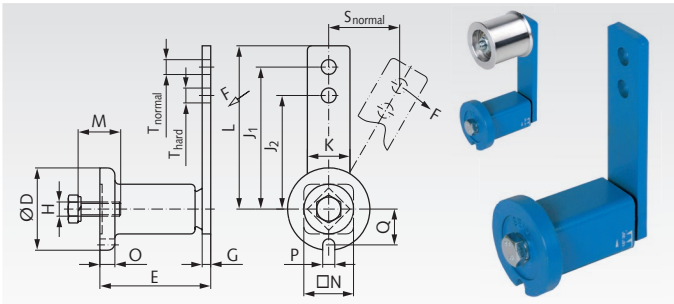

Product No.	Size	F max. normal N	F max. hard N	s max. normal mm	s max. hard mm	D mm	E mm	G mm	H mm	J_1 mm	J_2 mm	K mm	L mm	M mm	N mm	O mm	P mm	Q mm	T mm	M_A Nm	Weight kg
140 800 00	0	96	128	40	30	35	$51^{+1,0}_{-0,5}$	5	M6	80	60	20	90	20	22	6	8	16,5	8,5	10	0,18
140 801 00	1	135	170	50	40	45	$64^{+1,0}_{-0,5}$	5	M8	100	80	25	112,5	25	30	8	8,5	20,8	10,5	25	0,37
140 802 00	2	350	440	50	40	58	$79^{+1,5}_{-0,5}$	7	M10	100	80	30	115	30	35	10,5	8,5	25,3	10,5	49	0,66
140 802 12	2	350	440	50	40	58	$79^{+1,5}_{-0,5}$	7	M10	100	80	30	115	30	35	10,5	8,5	25,3	12,5	49	0,65
140 803 00	3	810	1050	65	50	78	$108^{+2}_{-0,5}$	8	M12	130	100	50	155	40	52	15	10,5	34,3	12,5	86	1,81
140 804 00	4	1500	1875	87,5	70	95	$140^{+2}_{-0,5}$	10	M16	175	140	60	205	40	66	15	12,5	42	20,5	210	3,55

Other tensioning element versions (stainless, zinc-plated etc.) see page 135.

Tensioning Rollers and Tensioning Elements for Timing Belts

Tensioning rollers are used for tensioning on the outside of the belt (back of belt). The tensioning rollers can either be mounted rigidly or be combined with tensioning elements to make up an elastic belt tensioner.

Note: tensioning rollers mounted on the outside of the closed span, shorten the service life of the belt due to alternate bending conditions. This means that when an outside tensioning roller is mounted a corrective factor of at least 1.2 has to be used when calculating the drive. If the belt is tensioned from the inside, a toothed pulley must be used (pulley with ball bearing only made to order).

Tensioning Rollers from Plastic

Material: Roller PA 6. Ball bearings DIN 625 from bearing steel.

Mounted on a suitable tensioning element, the tensioning roller becomes a ready-to-mount belt tensioner or on its own it can be used as idler. It runs on two permanently lubricated 2-Z ball bearings. Temperature range: -35° to +100°C.

Tensioning element has to be ordered separately.

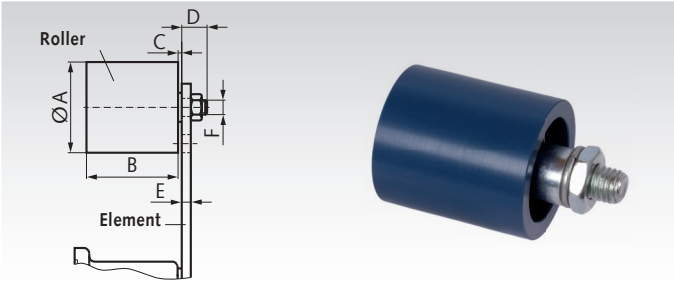

Product-No.	Diameter A mm	Product No. Tensioning Element matching	B mm	C mm	D mm	E max. mm	F mm	Weight kg
140 872 00	30	**140 800 00**	35	2	14	5	M8	0,08
140 874 00	40	**140 801 00**	45	6	16	7	M10	0,17
140 876 00	60	**140 803 00**	60	8	17	8	M12	0,40
140 878 00	80	**140 804 00**	90	8	25	10	M20	1,15
140 879 00	90	**140 804 00**	135	10	27	12	M20	1,75

Tensioning Elements

Material: Lever made from St52, housing up to Ø 78 mm made from sintered steel, over Ø 78 mm made from grey cast iron.

Tensioning elements are painted blue and are supplied with a zinc-plated screw and a spring washer.

These tensioning element can be used for tensioning all common kinds of chain and belt drives. The spring elements are based on highly-elastic natural rubber with a good shape memory and are designed for applications in temperatures from -40° to +80°C. Can be used for both tensioning directions.

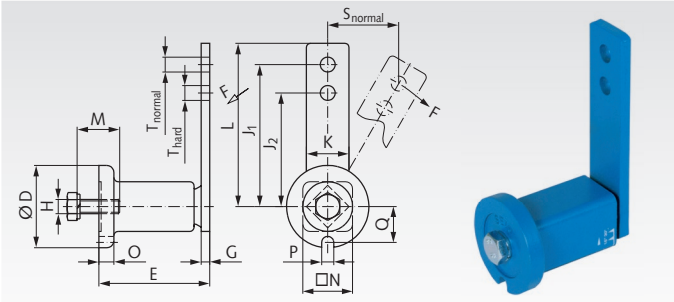

Product No.	Size	F max. normal N	F max. hard N	s max. normal mm	s max. hard mm	D mm	E mm	G mm	H mm	J_1 mm	J_2 mm	K mm	L mm	M mm	N mm	O mm	P mm	Q mm	T mm	M_A Nm	Weight kg
140 800 00	0	96	128	40	30	35	$51^{+1,0}_{-0,5}$	5	M6	80	60	20	90	20	22	6	8	16,5	8,5	10	0,18
140 801 00	1	135	170	50	40	45	$64^{+1,0}_{-0,5}$	5	M8	100	80	25	112,5	25	30	8	8,5	20,8	10,5	25	0,37
140 802 00	2	350	440	50	40	58	$79^{+1,5}_{-0,5}$	7	M10	100	80	30	115	30	35	10,5	8,5	25,3	10,5	49	0,66
140 803 00	3	810	1050	65	50	78	$108^{+2}_{-0,5}$	8	M12	130	100	50	155	40	52	15	10,5	34,3	12,5	86	1,81
140 804 00	4	1500	1875	87,5	70	95	$140^{+2}_{-0,5}$	10	M16	175	140	60	205	40	66	15	12,5	42	20,5	210	3,55

Other tensioning element versions (stainless, zinc-plated etc.) see page 135.

Belt Tensioners SPANN-BOY® TS

Material: Housing made of steel, powder-coated black. Tensioning pulley made of ultra-high-molecular polyethylene based on PE-UHMW, electrostatically dissipative.

These very low, ready-to-install belt tensioners enable noise reduction and wear reduction at belts.

- With two springs of different strengths that can be activated individually or together. This allows three clamping forces to be set.
- Usable tensioning way 40mm.
- Max. permissible belt speed 6m/s.

Temperature range: -20°C to +60°C.

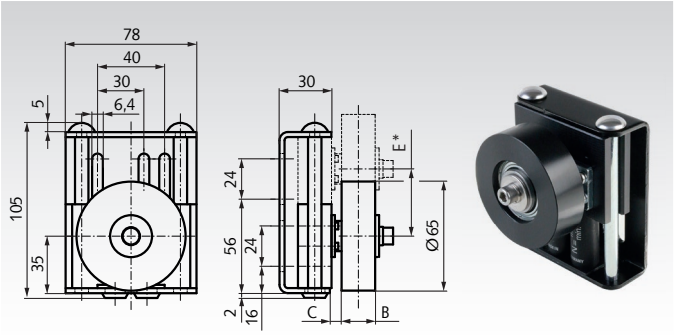

Ordering Details: e.g.: Product No. 140 418 01, Spann-Boy TS, B = 20mm

SPANN-BOY® TS

Product No.	B mm	C mm	E* mm	b** mm	Tension force N	Weight kg
140 418 01	20	13	40	15	33 - 190	0,62
140 418 02	30	8	40	25	33 - 190	0,64
140 418 03	40	8	40	35	33 - 190	0,67

* Tensioning way. ** Max. recommended belt width.

Adjustable Tensioning Forces:

The SPANN-BOY® TS has two different springs: one with low force and one with high force. These springs can get activated separately or together. So it is possible to adjust three different tensioning forces:

Only the low-force spring activated: 65 - 33 N.
Only the high-force spring activated: 125 - 63 N.
Both springs together activated: 190 - 96 N.

Belt Tensioners SPANN-BOX® Size 0

Material: Housing from thermoplast.
Tensioning pulley made of ultra-high-molecular polyethylene based on PE-UHMW, electrostatically dissipative. Screws and spring from stainless steel.

These small, ready-to-install tensioners enable noise reduction and wear reduction at belts.

- With spiral, linear spring. On choice two tensioning forces.
- With colored wear-off indicator: Green: o.k. Yellow: still o.k. Red: Tensioning force too low (below 32N or 60N).
- Usable travel up to the end of the yellow range: About 32mm. Total travel about 40mm.
- Max. permissible belt speed 3m/s

Temperature range: -20°C to +60°C.

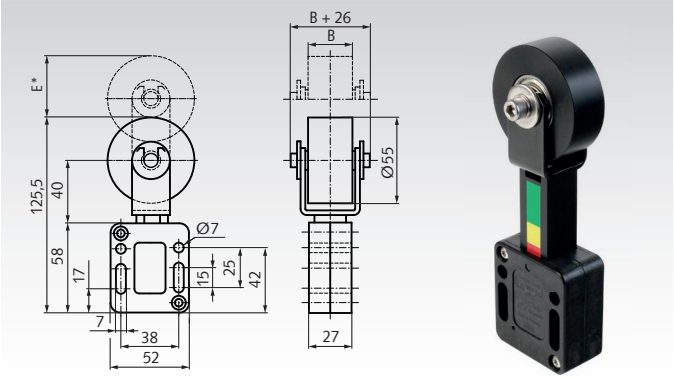

Ordering Details: e.g.: Product No. 140 411 01, Size 0, Low Tension Force, B = 20mm

SPANN-BOX® Size 0, Low Tensioning Force

Product No.	B mm	E* mm	b** mm	Tension force N	Weight kg
140 411 01	20	40	15	58 - 32	0,28
140 411 02	30	40	25	58 - 32	0,30
140 411 03	40	40	35	58 - 32	0,32

SPANN-BOX® Size 0, High Tensioning Force

Product No.	B mm	E* mm	b** mm	Tension force N	Weight kg
140 412 01	20	40	15	132 - 60	0,28
140 412 02	30	40	25	132 - 60	0,30
140 412 03	40	40	35	132 - 60	0,32

* Tensioning way. ** Max. recommended belt width.

Technical Note to Belt Tensioners SPANN-BOY® and SPANN-BOX®

Function: These tensioners are powered by linear spiral springs. The elastic tensioners are used to tension a belt with automatic compensation of the belt stretch. An application-related and optimally adjusted belt pre-tensioning force increases the service life as well as the functionality of the entire belt drive.

Determination of tensioning force: The tensioners SPANN-BOX® size 0 can be ordered with two different tensioning forces. At SPANN-BOX® size 1 and SPANN-BOY® TS, the tensioning force can get adjusted at different amounts.

Mounting: Mounting in the idle run is recommended. To enable a sufficient wrap angle, a belt wheel near the tensioner can be useful. All tensioners can be locked at maximum pretension for easy mounting. The locking device must then be released. In the case of the size 0 tensioning box, there is a small hole at the front and rear for a locking pin (supplied in the base of the housing).

Maintenance: The coloured wear indicator on all tensioners must be checked at regular intervals. The time interval depends on the conditions of use. If the red mark is visible, the clamping force is insufficient. Then the tensioner can be loosened, locked with maximum clamping force and readjusted.
Slotted holes allow readjustment over a wide range. A check of the toothed belt and the tensioning pulley must be carried out before readjustment.

Operation manual at www.maedler.de

Belt Tensioners SPANN-BOX® Size 1

Material: Housing made of steel, powder-coated black. Tensioning pulley made of ultra-high-molecular polyethylene based on PE-UHMW, electrostatically dissipative.

These small, ready-to-install tensioners enable noise reduction and wear reduction at belts.

- With three springs. On choice: Two tensioning force versions. At both versions, three different forces can get activated.
- With colored wear-off indicator: Green: o.k. Yellow: still o.k. Red: Tensioning force too low.
- Usable travel up to the end of the yellow range: About 32mm. Total travel about 40mm.
- Max. permissible belt speed Typ SR-0 = 8 m/s and Typ SR-L / Typ SR-S = 6m/s.

Temperature range: -20°C to +60°C.

Ordering Details: e.g.: Product No. 140 413 04, Spann-Box Size 1, SR-0, Low Tension Force

SPANN-BOX® Size 1, SR-0, Low Tensioning Force

Product No.	B mm	E* mm	b** mm	Tension force N	Weight kg
140 413 04	53	40	45	32 - 174	0,84

SPANN-BOX® Size 1, SR-0, High Tensioning Force

Product No.	B mm	E* mm	b** mm	Tension force N	Weight kg
140 414 04	53	40	45	60 - 396	0,84

SR-0

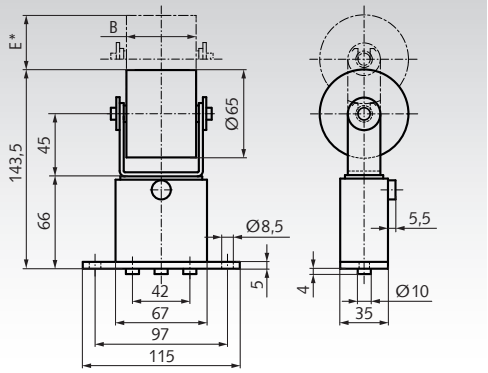

SPANN-BOX® Size 1, SR-L, Low Tensioning Force

Product No.	B mm	C mm	D mm	E* mm	b** mm	Tension force N	Weight kg
140 413 11	20	30	48	40	15	32 - 174	0,89
140 413 12	30	35	53	40	25	32 - 174	0,91
140 413 13	40	40	60	40	35	32 - 174	0,94

SPANN-BOX® Size 1, SR-L, High Tensioning Force

Product No.	B mm	C mm	D mm	E* mm	b** mm	Tension force N	Weight kg
140 414 11	20	30	48	40	15	60 - 396	0,89
140 414 12	30	35	53	40	25	60 - 396	0,91
140 414 13	40	40	60	40	35	60 - 396	0,94

SR-L

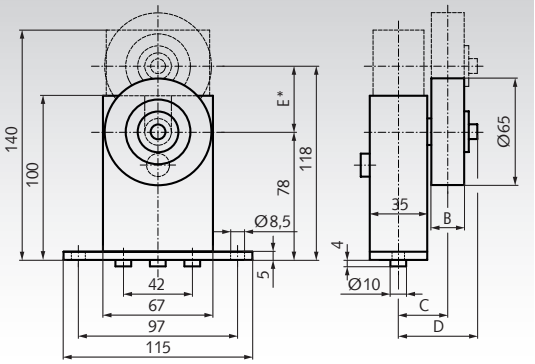

SPANN-BOX® Size 1, SR-S, Low Tensioning Force

Product No.	B mm	C mm	D mm	E* mm	b** mm	Tension force N	Weight kg
140 413 21	20	46	64	40	15	32 - 174	0,89
140 413 22	30	51	69	40	25	32 - 174	0,91
140 413 23	40	56	76	40	35	32 - 174	0,93

SPANN-BOX® Size 1, SR-S, High Tensioning Force

Product No.	B mm	C mm	D mm	E* mm	b** mm	Tension force N	Weight kg
140 414 21	20	46	64	40	15	60 - 396	0,89
140 414 22	30	51	69	40	25	60 - 396	0,91
140 414 23	40	56	76	40	35	60 - 396	0,93

* Tensioning way. ** Max. recommended belt width.

SR-S

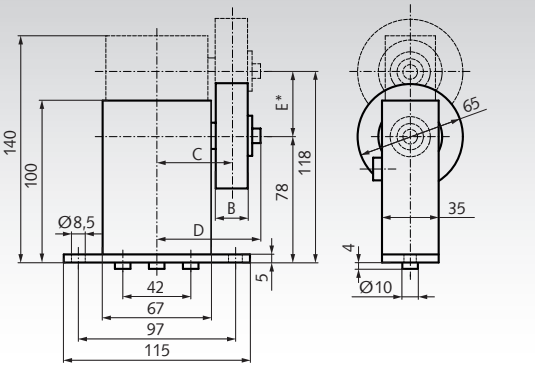

Adjustable Tensioning Forces:

On choice, there are two versions, with low tensioning force or with high tensioning force. Both versions have three springs, which can get activated independent from each other to reach three different tensioning forces.

Version with low tensioning force:
1 spring activated: 58 - 32 N.
2 springs activated: 116 - 64 N.
3 springs activated: 174 - 96 N.

Version with high tensioning force:
1 spring activated: 132 - 60 N.
2 springs activated: 264 - 120 N.
3 springs activated: 396 - 180 N.

Optical Belt Tensionmeter OTM-1

OTM-1 is a precise instrument for contactless measuring of the belt tension in power transmission drives, like toothed belts or V-belts. The use of OTM-1 enables an optimal function and maximum lifetime of belt drives.

The measuring results are reliable, recordable and documentable dates, for calculation-based check of the strand force and bearing load of the belt drive application.

The OTM-1 is especially useful for mounting and maintenance. It is also a helpful equipment in the quality assurance and at the final inspection of belt drives.

Product No. 140 888 00

Ordering Details: Product No. 140 888 00 Optical Belt Tensionmeter OTM-1

Product Description

- For power transmission belts which can swing freely; not able for transportation belts lying on a slide rail.
- Non-contact, optical measuring with pulsed light.
- Measuring at non-running machine, tapping the belt to swing.
- Exactly measuring of belt frequency and strand force.
- Exactly calculation of the set points.
- Needed for protocolling according to DIN EN ISO 9001ff.
- User guidance and displaying the measuring results in 10 languages: English, German, French, Spainish, Portuguese, Swedish, Norwegian, Finnish, Danish.
- Displaying the measuring results on choice as natural belt frequency in Hz or as strand force in Newton or Pound.
- Easy and save operation.
- Compact and handy device.
- Device testing / re-calibrating can be done by the customer with a 250 Hz tuning fork.
- Versatile use for different materials: All mechanical pre-tensioned parts can be measured, which are able to swing freely, for example belts, robes, wires, films, cables, tapes, and sheets.

Determinating the Set Point

Possibilities to determinate the set point (examples):

1. The machine designer calculates the needed strand force and will define the set point, based on the belt drive calculation and the bearing dimensioning.

2. Empirical: This is a good way, if you have a proven construction. The installer mounts the belt with an appropriate tensioning, based on his experience. Then the tensioning can get measured and the result is the set point for future installations.

3. Calculation of the set point at the PC: Included in delivery, there is a document with the download link for a PC calculation software in English and German. This software can be installed on the customer´s computer. After input the belt drive dates, the software calculates the optimal frequency in Newton or Pound. Measuring the belt, the instrument can show the actual strand force directly in Newton or Pound, if the belt length and belt mass have been put in before.

Technical Data

Measuring range:	10 - 800 Hz
Digital sampling error:	< 1%
Indication error:	+/- 1 Hz
Total error:	< 5%
Nominal temperature:	+ 20° C
Operating temperature:	-10° up to + 50° C
Shipping temperature:	-5° up to + 50° C
Casing:	Plastic ABS
Display:	2-line LCD, 16 characters/line
Languages:	10
Input strand length :	max. 9,99 m
Input belt mass:	max. 9,999 kg/m
Power supply:	9 V battery, optionally accumulator
Dimension of unit:	80 x 37 x 162 mm (with plug-in probe)
Dimension of case:	230 x 200 x 70 mm
Weight, including case:	672 g

Scope of Delivery

- Measuring instrument.
- Plug-in probe for one-hand operation.
- Measuring probe with cable for limited access space.
- 9 V battery (9 V accumulator and charger on request).
- Document with the download link for a PC calculation software in English and German, to calculate the frequency set point.
- Test certificate.
- Transport case from shock-resistant, durable ABS.

Operation manual in English and German as PDF-file at www.maedler.de

V-Belt Tensioner with Mounted V-Belt Pulley

Material: Housings up to Ø 78 mm made from sintered steel, over Ø 78 mm made from grey cast iron.
Lever St52, V-belt pulley cast steel.

Matching narrow V-belts DIN 2215 und DIN 7753.

Pulley with sealed ball bearings, permanently lubricated.

Mesure A of the pulley can be adjusted by distance-washers on the axis, which is screwed onto the tensioner.

Can be used for both tensioning directions.

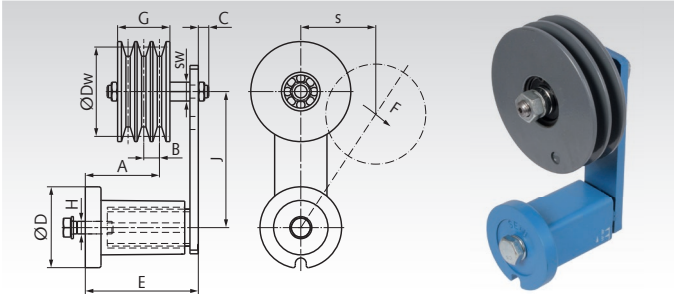

Ordering Details: e.g.: Product No. 140 850 01, SPZ, 1 Groove, Dw=90mm

Product No.	Profile	No. of Grooves	Dw mm	Tensioner Size	$F_{max.}$ N	$Speed_{max.}$ min^{-1}	$s_{max.}$ mm	A mm	B mm	C mm	Ø D mm	E mm	J mm	G mm	H mm	sw mm	Weight kg
140 851 01	XPZ SPZ Z (10)	1	90	2	350	10000	50	20-43	12	13	58	79	100	16	M10	19	2,0
140 851 02	XPZ SPZ Z (10)	2	90	2	350	10000	50	31-48	12	13	58	79	100	28	M10	19	2,3
140 851 03	XPZ SPZ Z (10)	3	90	2	350	10000	50	31-37	12	13	58	79	100	40	M10	19	2,6
140 851 11	XPA SPA A (13)	1	90	2	350	7400	50	15-36	15	19	58	79	100	20	M10	27	2,0
140 851 12	XPA SPA A (13)	2	90	2	350	7400	50	20-42	15	19	58	79	100	35	M10	27	2,3
140 852 01	XPA SPA A (13)	1	90	3	810	7400	65	34-64	15	19	78	108	130	20	M12	27	3,1
140 852 02	XPA SPA A (13)	2	90	3	810	7400	65	49-70	15	19	78	108	130	35	M12	27	3,5
140 852 03	XPA SPA A (13)	3	90	3	810	7400	65	49-70	15	19	78	108	130	50	M12	27	3,8
140 852 04	XPA SPA A (13)	1	125	3	810	5300	65	33-63	15	19	78	108	130	20	M12	27	3,9
140 852 05	XPA SPA A (13)	2	125	3	810	5300	65	49-70	15	19	78	108	130	35	M12	27	4,8
140 854 01	XPB SPB B (17)	1	125	3	810	5300	65	35-65	19	19	78	108	130	25	M12	27	4,2
140 854 02	XPB SPB B (17)	2	125	3	810	5300	65	48-69	19	19	78	108	130	44	M12	27	5,3
140 854 03	XPB SPB B (17)	3	125	4	1500	5300	87,5	104-107	19	17	95	140	175	63	M16	27	7,9
140 854 04	XPB SPB B (17)	3	140	4	1500	4000	87,5	104-107	19	17	95	140	175	63	M16	27	9,2

Tensioning Rollers from Plastic

Material: Roller PA 6. Ball bearings DIN 625 from bearing steel.

Mounted on a suitable tensioning element, the tensioning roller becomes a ready-to-mount belt tensioner or on its own it can be used as idler. It runs on two permanently lubricated 2-Z ball bearings. Temperature range: -35° to +100°C.

Tensioning element has to be ordered separately.

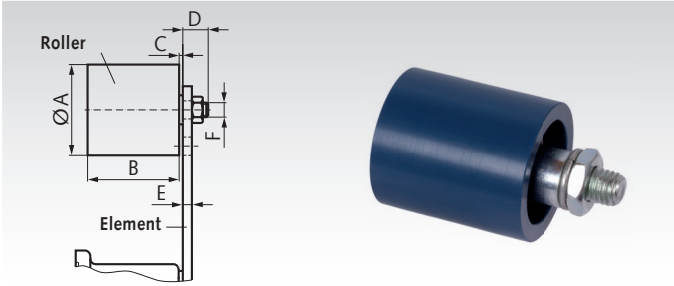

Ordering Details: e.g.: Product No. 140 872 00, Tensioning Roller Ø 30 mm

Product-No.	Diameter A mm	Product No. Tensioning Element matching	B mm	C mm	D mm	E max. mm	F mm	Weight kg
140 872 00	30	**140 800 00**	35	2	14	5	M8	0,08
140 874 00	40	**140 801 00**	45	6	16	7	M10	0,17
140 876 00	60	**140 803 00**	60	8	17	8	M12	0,40
140 878 00	80	**140 804 00**	90	8	25	10	M20	1,15
140 879 00	90	**140 804 00**	135	10	27	12	M20	1,75

Tensioning Elements in Standard Version

Material: Housing up to Ø 78 mm made from sintered steel, over Ø 78 mm made from grey cast iron, lever made from St52.

Can be used for tensioning all common kinds of chain and belt drives. The elastomeric inserts are based on highly-elastic natural rubber with a good shape memory and are designed for applications in temperatures from -40° to +80°C
The tensioning elements are painted blue and supplied with a zinc-plated screw and spring washer. Can be used for both tensioning directions. Temperature range: -40° to +80°C.

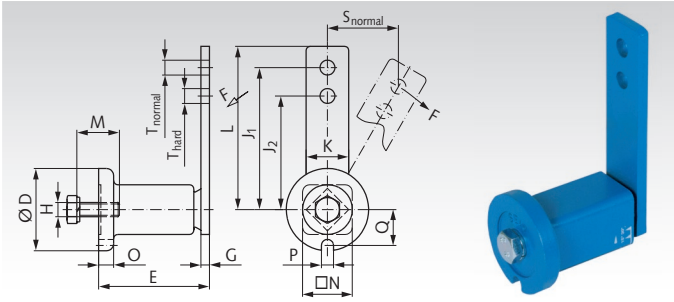

Ordering Details: e.g.: Product No. 140 800 00, Tensioning Element Ø 35 mm

Product No.	Size	F max. normal N	F max. hard N	s max. normal mm	s max. hard mm	D mm	E mm	G mm	H mm	J_1 mm	J_2 mm	K mm	L mm	M mm	N mm	O mm	P mm	Q mm	T mm	M_A Nm	Weight kg
140 800 00	0	96	120	40	30	35	$51^{+1,0}_{-0,5}$	5	M6	80	60	20	90	20	22	6	8	16,5	8,5	10	0,18
140 801 00	1	135	170	50	40	45	$64^{+1,0}_{-0,5}$	5	M8	100	80	25	112,5	25	30	8	8,5	20,8	10,5	25	0,37
140 802 00	2	350	440	50	40	58	$79^{+1,5}_{-0,5}$	7	M10	100	80	30	115	30	35	10,5	8,5	25,3	10,5	49	0,66
140 803 00	3	810	1015	65	50	78	$108^{+2}_{-0,5}$	8	M12	130	100	50	155	40	52	15	10,5	34,3	12,5	86	1,81
140 804 00	4	1500	1875	87,5	70	95	$140^{+2}_{-0,5}$	10	M16	175	140	60	205	40	66	15	12,5	42	20,5	210	3,55

Tensioning Rollers / Idlers TS for Belt Drives

Material: Aluminium, one-piece, with turned flanges.
Distance bushes and ball bearings from steel.

Tensioning Rollers / Idlers are used on the outside of the belt (back of belt). Mounted on a suitable tensioning element, the tensioning roller becomes a ready-to-mount belt tensioner or, on its own, it can be used as an idler. It runs on permanently lubricated 2Z ball bearings. One loose, zinc-plated distance bush is included in the delivery (in the drawing on the right side). Support, screw set and tensioning element have to be ordered separately.

Ordering Details: e.g.: Product No. 140 882 01, Tensioning Roller TS 20-8

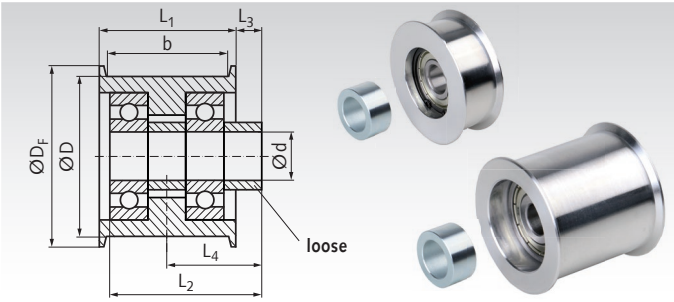

Product No.	Type	D mm	b mm	d mm	D_F mm	L_1 mm	L_2 mm	L_3 mm	L_4 mm	Ball Bearing	Weight g	Product No. additional Bush	d_B x D_B x L_B mm	Weight g
140 882 01	TS 20-8	20	8	5	25	11	10	2	7,5	1 x 625-2Z	12	**140 805 05**	5x10x5	2,3
140 882 02	TS 20-13	20	13	5	25	16	20	4,5	12,5	2 x 625-2Z	22	**140 805 05**	5x10x5	2,3
140 883 01	TS 30-13	30	13	8	35	16	14	2,5	10,5	1 x 608-2Z	32	**140 808 07**	8x13x7	4,5
140 883 02	TS 30-19	30	19	8	35	22	28	6,5	17,5	2 x 608-2Z	58	**140 808 07**	8x13x7	4,5
140 883 03	TS 30-28	30	28	8	35	32	28	1,5	17,5	2 x 608-2Z	64	**140 808 07**	8x13x7	4,5
140 884 01	TS 40-14	40	14	10	45	17	18	5	13,5	1 x 6200-2Z	74	**140 810 09**	10x17x9	10,5
140 884 02	TS 40-23	40	23	10	45	27	36	9	22,5	2 x 6200-2Z	138	**140 810 09**	10x17x9	10,5
140 884 03	TS 40-28	40	28	10	45	32	36	6,5	22,5	2 x 6200-2Z	146	**140 810 09**	10x17x9	10,5
140 884 04	TS 40-38	40	38	10	45	42	36	1,5	22,5	2 x 6200-2Z	162	**140 810 09**	10x17x9	10,5
140 886 01	TS 60-19	60	19	12	68	23	24	6,5	18	1 x 6301-2Z	206	**140 812 12**	12x20x12	18,9
140 886 02	TS 60-31	60	31	12	68	36	48	12	30	2 x 6301-2Z	366	**140 812 12**	12x20x12	18,9
140 886 03	TS 60-38	60	38	12	68	43	48	8,5	30	2 x 6301-2Z	402	**140 812 12**	12x20x12	18,9
140 886 04	TS 60-54	60	54	12	68	60	60	6	36	2 x 6301-2Z	530	**140 812 12**	12x20x12	18,9
140 888 01	TS 80-28	80	28	20	90	33	30	6	22,5	1 x 6304-2Z	500	**140 820 15**	20x30x15	46,2
140 888 02	TS 80-40	80	40	20	90	45	60	15	37,5	2 x 6304-2Z	820	**140 820 15**	20x30x15	46,2
140 888 03	TS 80-54	80	54	20	90	60	60	7,5	37,5	2 x 6304-2Z	940	**140 820 15**	20x30x15	46,2
140 889 01	TS 120-28	120	28	20	130	34	39,5	5,5	22,5	1 x 6304-2Z	1110	**140 820 15**	20x30x15	46,2
140 889 02	TS 120-36	120	36	20	130	42	50	9	30,0	2 x 6304-2Z	1490	**140 820 10**	20x30x10	30,8
140 889 03	TS 120-44	120	44	20	130	50	60	12,5	37,5	2 x 6304-2Z	1740	**140 820 15**	20x30x15	46,2
140 889 04	TS 120-54	120	54	20	130	62	60	6,5	37,5	2 x 6304-2Z	2060	**140 820 15**	20x30x15	46,2

Distance Bushes for Tensioning Rollers / Idlers TS

Material: Steel, zinc-plated.

As spare part or as an additional distance bush for double-sided mounting.

Ordering Details: e.g.: Product No. 140 805 05, Distance Bush 5 x 10 x 5 mm

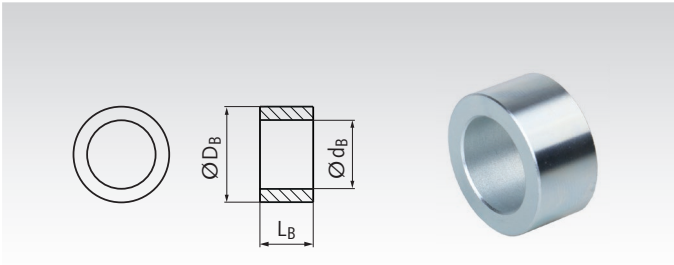

Product No.	d_B mm	D_B mm	L_B mm	Weight g
140 805 05	5	10	5	2,3
140 808 07	8	13	7	4,5
140 810 09	10	17	9	10,5
140 812 12	12	20	12	18,9
140 812 24	12	20	24	37,9
140 820 10	20	30	10	30,8
140 820 15	20	30	15	46,2

Screw Sets page 215

Supports for Idlers or Tensioning Elements

Material: Steel, blue painted.

This support enables an easy mounting of an idler wheel / tensioning roller or a tensioning element to the machine. The hole A is for fastening the tensioner with it's central screw. The mounting can be done at the front side or back side of the support. For any other purposes, the both holes B can be used to fix other parts instead of a tensioner.

Ordering Details: e.g.: Product No. 140 800 01, Support Size 0

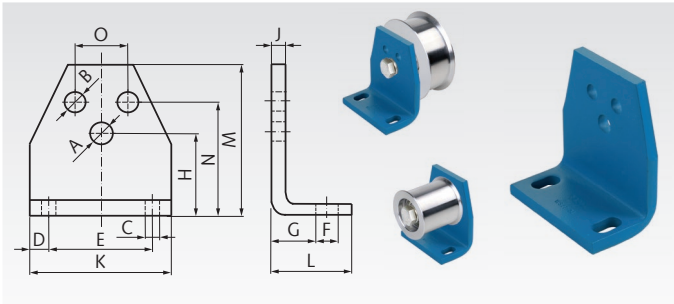

Product No.	Size	A mm	B mm	C mm	D mm	E mm	F mm	G mm	H mm	J mm	K mm	L mm	M mm	N mm	O mm	Weight kg
140 800 01	0	6,5	5,5	7	7,5	30	13	11,5	27	4	45	30	46	35	10	0,08
140 801 01	1	8,5	6,5	7	7,5	40	13	13,5	34	5	55	32	58	44	12	0,15
140 802 01	2	10,5	8,5	9,5	10	50	15,5	16,5	43	6	70	38	74	55	20	0,30
140 803 01	3	12,5	10,5	11,5	12,5	65	21,5	21	57	8	90	52	98	75	25	0,66
140 804 01	4	16,5	12,5	14	15	80	24	21	66	8	110	55	116	85	35	0,94
140 804 02	4	20,5	12,5	14	15	80	24	21	66	8	110	55	116	85	35	0,94