Metallbalgkupplung MKJ
mit Klemmnabe

Metal bellow coupling MKJ
with clamping hub

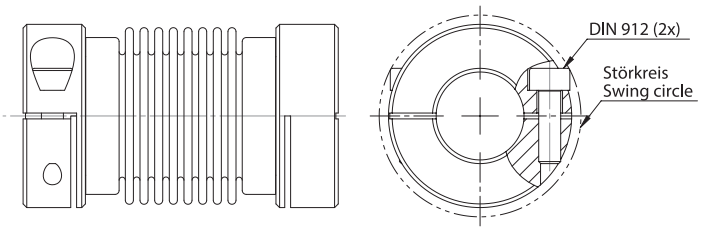

Merkmale
- Spielfreie Drehmomentübertragung
- Kleiner Einbauraum
- Hohe Temperaturbeständigkeit
- Niedriges Massenträgheitsmoment
- Ideal für Servomotoren
- Kleinste Rückstellkräfte auf die Lagerstellen
- Wartungsfrei

Werkstoff der Naben:	Aluminium
Werkstoff des Metallbalges:	Edelstahl
Verbindung Balg-Nabe:	eingerollt (MKJ-7 und 14 geklebt)

Bestellbezeichnung / Beispiel:

MKJ-50	-	6H7	-	12H7
Typ+Größe		Bohrung D1		Bohrung D2

Characteristics
- Backlash-free torque transmission
- A small space for assembly
- High level of thermal stability
- Very low mass moment of inertia
- Ideal for servomotors
- Low restore forces on bearing points
- Maintenance-free

Material of hubs:	aluminium
Material of bellows:	stainless steel
Connection of bellow to hub:	rolled up (MKJ-7 and 14 glued)

Order description / example:

MKJ-50	-	6H7	-	12H7
Type+Size		Bore D1		Bore D2

Standard Optionen / Standardized options

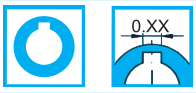

Gewünschte Optionen müssen im Bestelltext angegeben werden (Legende Symbole S. 7).
Desired options have to be mentioned in the order text (key symbols p. 7).

© by HA-CO GmbH • Phone +49 6022 655810 • info@ha-co.eu • www.ha-co.eu

MKJ-7

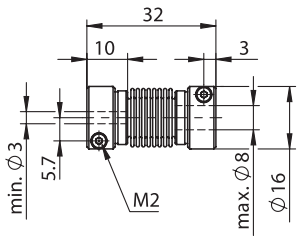

0.7 [Nm]	Nennmoment Nominal torque	1.4 [Nm]
190 [Nm/rad]	Torsionssteife Torsional stiffness	390 [Nm/rad]
18 [N/mm]	Laterale Federsteife Lateral spring stiffness	31 [N/mm]
10 [N/mm]	Axiale Federsteife Axial spring stiffness	21 [N/mm]
±0.1 [mm]	Max. lateraler Wellenversatz Max. lateral shaft misalignment	±0.1 [mm]
±0.3 [mm]	Max. axialer Wellenversatz Max. axial shaft misalignment	±0.3 [mm]
±1 [Grad] [Degree]	Max. angularer Wellenversatz Max. angular shaft misalignment	±1 [Grad] [Degree]
0.35 [10^{-6} kgm²]	Trägheitsmoment Interia torque	0.35 [10^{-6} kgm²]
10 [g]	Masse Mass	11 [g]
0.70 M_A[Nm]	Anzugsmoment der Schrauben Tightening torque of screws	0.70 M_A[Nm]
17.4 [ø mm]	Störkreis Swing circle	17.4 [ø mm]

MKJ-14

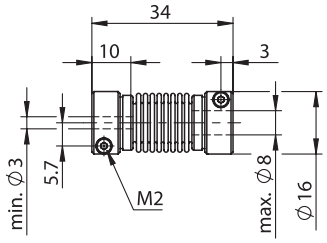

MKJ-20

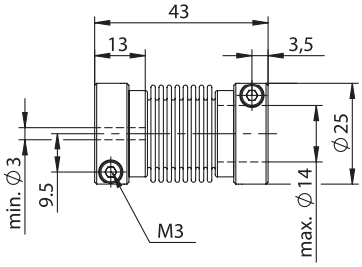

2.0 [Nm]	Nennmoment Nominal torque	5.0 [Nm]
600 [Nm/rad]	Torsionssteife Torsional stiffness	1220 [Nm/rad]
16 [N/mm]	Laterale Federsteife Lateral spring stiffness	26 [N/mm]
7.50 [N/mm]	Axiale Federsteife Axial spring stiffness	16 [N/mm]
±0.15 [mm]	Max. lateraler Wellenversatz Max. lateral shaft misalignment	±0.15 [mm]
±0.5 [mm]	Max. axialer Wellenversatz Max. axial shaft misalignment	±0.5 [mm]
±1 [Grad] [Degree]	Max. angularer Wellenversatz Max. angular shaft misalignment	±1 [Grad] [Degree]
6 [10^{-6} kgm²]	Trägheitsmoment Interia torque	7 [10^{-6} kgm²]
95 [g]	Masse Mass	95 [g]
2.00 M_A[Nm]	Anzugsmoment der Schrauben Tightening torque of screws	2.00 M_A[Nm]
27.5 [ø mm]	Störkreis Swing circle	27.5 [ø mm]

MKJ-50

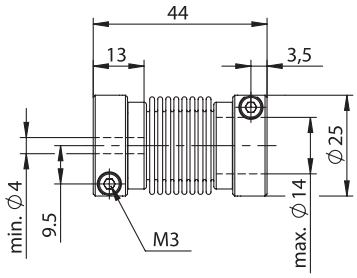

MKJ-100

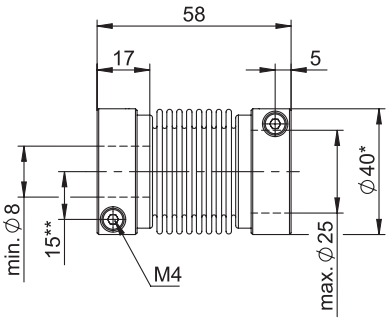

Bei Bohrungs-Ø > 20 / with bore-Ø > 20
*Ø46 // **17

10.0 [Nm]	Nennmoment Nominal torque	15.0 [Nm]
2590 [Nm/rad]	Torsionssteife Torsional stiffness	5210 [Nm/rad]
17 [N/mm]	Laterale Federsteife Lateral spring stiffness	29 [N/mm]
8 [N/mm]	Axiale Federsteife Axial spring stiffness	17 [N/mm]
±0.2 [mm]	Max. lateraler Wellenversatz Max. lateral shaft misalignment	±0.25 [mm]
±0.7 [mm]	Max. axialer Wellenversatz Max. axial shaft misalignment	±0.7 [mm]
±1 [Grad] [Degree]	Max. angularer Wellenversatz Max. angular shaft misalignment	±1 [Grad] [Degree]
23 [10^{-6} kgm²]	Trägheitsmoment Interia torque	27 [10^{-6} kgm²]
110 [g]	Masse Mass	120 [g]
5 M_A[Nm]	Anzugsmoment der Schrauben Tightening torque of screws	5 M_A[Nm]
41.1 [ø mm]	Störkreis bei Bohrungs-Ø ≤ 20 Swing circle with bore-Ø ≤ 20	41.1 [ø mm]

MKJ-150

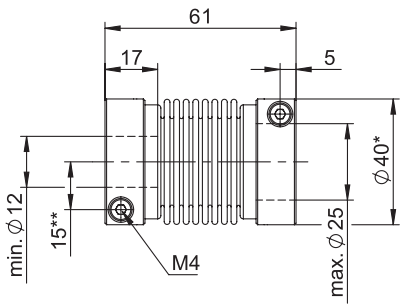

Bei Bohrungs-Ø > 20 / with bore-Ø > 20
*Ø46 // **17

Metallbalgkupplung MKS
steckbar mit Klemmnabe

Metal bellow coupling MKS
connectible with clamping hub

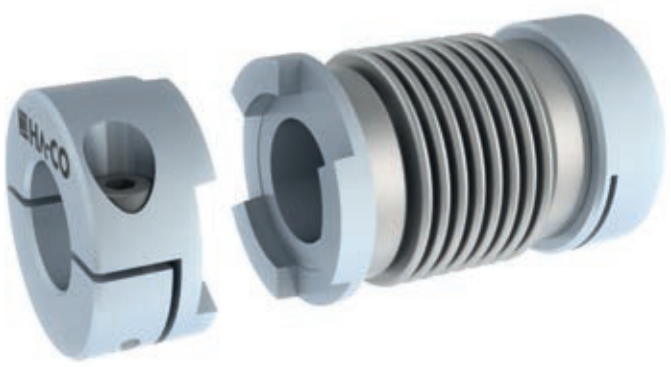

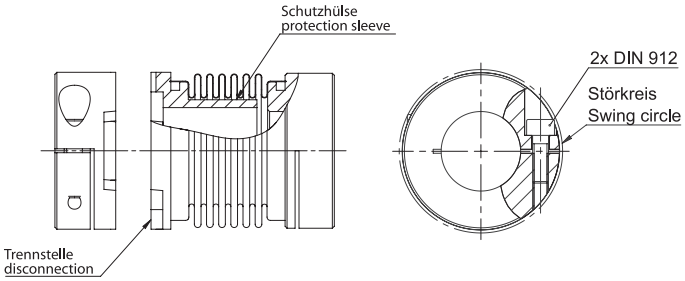

Merkmale
- Kleines Massenträgheitsmoment
- Montagefreundlich durch steckbare Klemmnabe
- Klemmnaben aus Aluminium
- Kleiner Einbauraum
- Wartungsfrei
- Ausgewuchtet
- Balg durch Hülse vor Stauchung und Verformung geschützt
- Ausgleich von Fluchtungsfehlern

Werkstoff der Naben:	Aluminium
Werkstoff des Metallbalges:	Edelstahl
Verbindung Balg-Nabe:	eingerollt (MKS-8 geklebt)

Bestellbezeichnung / Beispiel:

MKS-30	-	10H7	-	12H7
Typ+Größe		Bohrung D1		Bohrung D2

Hinweise:
Der Metallblag ist bei Fehlmanipulation (falsche Steckposition) durch im innern angebrachte Schutzhülse vor Stauchung geschützt. Die axiale Vorspannung des Metallbalges (jeweils 1mm) garantiert eine absolute Spielfreiheit in der Steckverbindung.

Characteristics
- Very mass moment of inertia torque
- Easy assembly by connectible clamping hub
- Clamping hub in aluminium
- Less assembly space required
- Maintenance-free
- Balanced
- Metal bellows protected of compression by a sleeve
- Compensation of alignment mistakes

Material of hubs:	aluminium
Material of bellows:	stainless steel
Connection of bellows to hub:	rolled up (MKS-8 glued)

Order description / example:

MKS-30	-	10H7	-	12H7
Type+Size		Bore D1		Bore D2

Note:
The bellow is protected by an inside protection sleeve to avoid damaging manipulation and a compression of the bellow. The axial pre-charge of the bellow of 1mm guaranties a blacklash free connection.

Standard Optionen / Standardized options

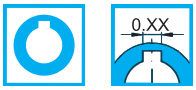

Gewünschte Optionen müssen im Bestelltext angegeben werden (Legende Symbole S. 7).
Desired options have to be mentioned in the order text (key symbols p. 7).

© by HA-CO GmbH • Phone +49 6022 655810 • info@ha-co.eu • www.ha-co.eu

MKS-8

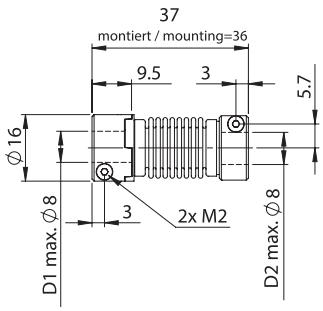

MKS-15

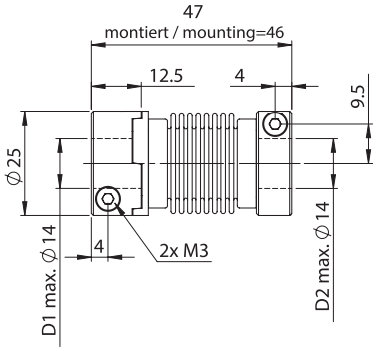

MKS-8			MKS-15
0.8 [Nm]	Nennmoment Nominal torque	1.5 [Nm]	
370 [10^3 Nm/rad]	Torsionssteife Torsional stiffness	620 [10^3 Nm/rad]	
20 [N/mm]	Laterale Federsteife Lateral spring stiffness	7 [N/mm]	
26 [N/mm]	Axiale Federsteife Axial spring stiffness	13 [N/mm]	
±0.1 [mm]	Max. lateraler Wellenversatz Max. lateral shaft misalignment	±0.15 [mm]	
±0.3 [mm]	Max. axialer Wellenversatz Max. axial shaft misalignment	±0.5 [mm]	
±1 [Grad] [Degree]	Max. angularer Wellenversatz Max. angular shaft misalignment	±1 [Grad] [Degree]	
0.35 [10^{-6} kgm²]	Trägheitsmoment Interia torque	6 [10^{-6} kgm²]	
14 [g]	Masse Mass	40 [g]	
1 M_A[Nm]	Anzugsmoment der Schrauben Tightening torque of screws	2 M_A[Nm]	
17.4 [ø mm]	Störkreis Swing circle	25.8 [ø mm]	

MKS-30

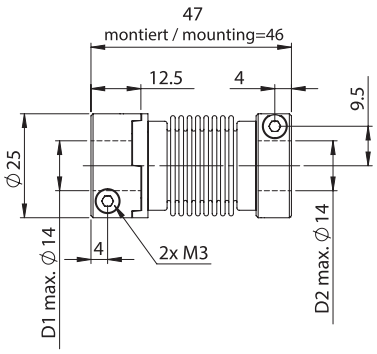

MKS-45

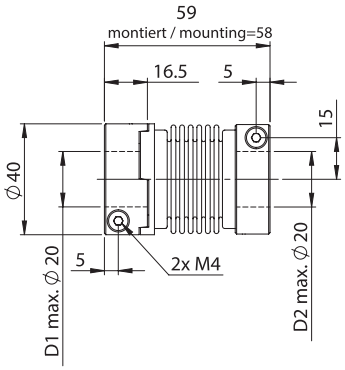

MKS-30			MKS-45
3 [Nm]	Nennmoment Nominal torque	4.5 [Nm]	
1220 [10^3 Nm/rad]	Torsionssteife Torsional stiffness	3200 [10^3 Nm/rad]	
14 [N/mm]	Laterale Federsteife Lateral spring stiffness	7 [N/mm]	
22 [N/mm]	Axiale Federsteife Axial spring stiffness	14 [N/mm]	
±0.15 [mm]	Max. lateraler Wellenversatz Max. lateral shaft misalignment	±0.2 [mm]	
±0.5 [mm]	Max. axialer Wellenversatz Max. axial shaft misalignment	±0.7 [mm]	
±1 [Grad] [Degree]	Max. angularer Wellenversatz Max. angular shaft misalignment	±1 [Grad] [Degree]	
7 [10^{-6} kgm²]	Trägheitsmoment Interia torque	23 [10^{-6} kgm²]	
48 [g]	Masse Mass	120 [g]	
5 M_A[Nm]	Anzugsmoment der Schrauben Tightening torque of screws	5 M_A[Nm]	
27.5 [ø mm]	Störkreis Swing circle	41.1 [ø mm]	

MKS-130

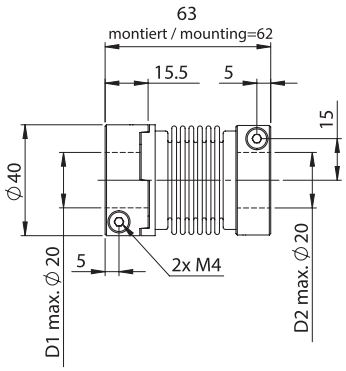

MKS-130	
13 [Nm]	Nennmoment Nominal torque
8700 [10^3 Nm/rad]	Torsionssteife Torsional stiffness
33 [N/mm]	Laterale Federsteife Lateral spring stiffness
57 [N/mm]	Axiale Federsteife Axial spring stiffness
±0.25 [mm]	Max. lateraler Wellenversatz Max. lateral shaft misalignment
±0.7 [mm]	Max. axialer Wellenversatz Max. axial shaft misalignment
±1 [Grad] [Degree]	Max. angularer Wellenversatz Max. angular shaft misalignment
31 [10^{-6} kgm²]	Trägheitsmoment Interia torque
140 [g]	Masse Mass
5 M_A[Nm]	Anzugsmoment der Schrauben Tightening torque of screws
41.1 [ø mm]	Störkreis Swing circle

Edelstahl Metallbalgkupplung MKE
mit Klemmnabe

Stainless steel metal bellow coupling MKE
with clamping hub

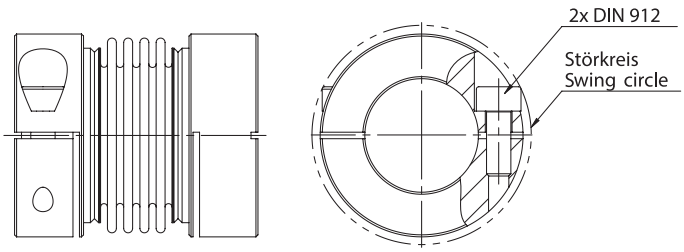

Merkmale
- Absolut spielfrei
- Komplett in Edelstahl
- Kleiner Einbauraum
- Niedriges Trägheitsmoment
- Montagefreundlich
- Wartungsfrei
- Sehr hohe Temperaturbeständigkeit (250°C)

Verbindung Balg-Nabe: geschweißt

Bestellbezeichnung / Beispiel:
MKE-7 - 4H7 - 6H7
Typ+Größe Bohrung D1 Bohrung D2

Characteristics
- Zero backlash
- Completely stainless steel
- A small space for assembly
- Very low mass inertie torque
- Easy for assembly
- Maintenance-free
- Very high level of thermal stability (250°C)

Connection of bellows to hub:welded

Order description / example:
MKE7 - 4H7 - 6H7
Type+Size Bore D1 Bore D2

Standard Optionen / Standardized options

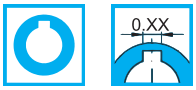

Gewünschte Optionen müssen im Bestelltext angegeben werden (Legende Symbole S. 7).
Desired options have to be mentioned in the order text (key symbols p. 7).

EDELSTAHL Rost frei STAINLESS STEEL

© by HA-CO GmbH • Phone +49 6022 655810 • info@ha-co.eu • www.ha-co.eu

MKE-7

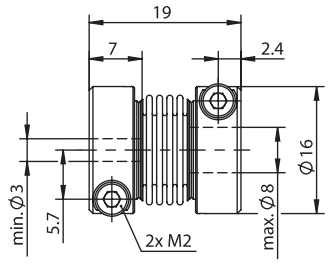

0.70 [Nm]	Nennmoment Nominal torque	1.40 [Nm]
340 [Nm/rad]	Torsionssteife Torsional stiffness	690 [Nm/rad]
75 [N/mm]	Laterale Federsteife Lateral spring stiffness	116 [N/mm]
17 [N/mm]	Axiale Federsteife Axial spring stiffness	36 [N/mm]
±0.035 [mm]	Max. lateraler Wellenversatz Max. lateral shaft misalignment	±0.036 [mm]
±0.20 [mm]	Max. axialer Wellenversatz Max. axial shaft misalignment	±0.17 [mm]
±1 [Grad] [Degree]	Max. angularer Wellenversatz Max. angular shaft misalignment	±1 [Grad] [Degree]
0.70 [10^{-6} kgm²]	Trägheitsmoment Interia torque	0.72 [10^{-6} kgm²]
19 [g]	Masse Mass	21 [g]
1.3 M_A[Nm]	Anzugsmoment der Schrauben Tightening torque of screws	1.3 M_A[Nm]
17.4 [ø mm]	Störkreis Swing circle	17.4 [ø mm]

MKE-14

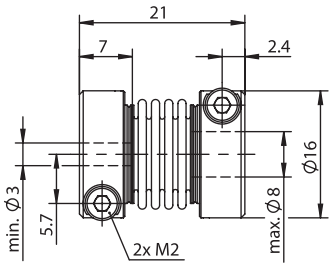

MKE-20

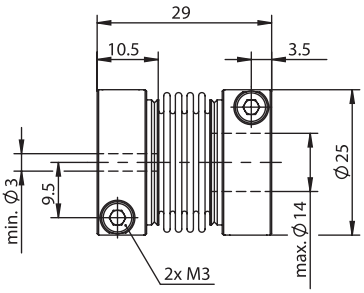

2 [Nm]	Nennmoment Nominal torque	5 [Nm]
1200 [Nm/rad]	Torsionssteife Torsional stiffness	2460 [Nm/rad]
99 [N/mm]	Laterale Federsteife Lateral spring stiffness	189 [N/mm]
13 [N/mm]	Axiale Federsteife Axial spring stiffness	28 [N/mm]
±0.04 [mm]	Max. lateraler Wellenversatz Max. lateral shaft misalignment	±0.04 [mm]
±0.30 [mm]	Max. axialer Wellenversatz Max. axial shaft misalignment	±0.28 [mm]
±1 [Grad] [Degree]	Max. angularer Wellenversatz Max. angular shaft misalignment	±1 [Grad] [Degree]
4.90 [10^{-6} kgm²]	Trägheitsmoment Interia torque	5.10 [10^{-6} kgm²]
50 [g]	Masse Mass	52 [g]
2 M_A[Nm]	Anzugsmoment der Schrauben Tightening torque of screws	2 M_A[Nm]
27.5 [ø mm]	Störkreis Swing circle	27.5 [ø mm]

MKE-50

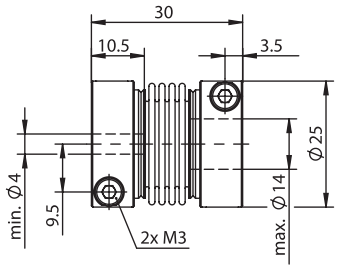

MKE-100

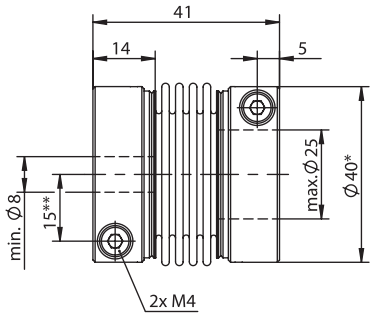

Bei Bohrungs-Ø > 20 / with bore-Ø > 20
*Ø46 // **17

9 [Nm]	Nennmoment Nominal torque	15 [Nm]
4850 [Nm/rad]	Torsionssteife Torsional stiffness	9800 [Nm/rad]
103 [N/mm]	Laterale Federsteife Lateral spring stiffness	171 [N/mm]
11 [N/mm]	Axiale Federsteife Axial spring stiffness	24 [N/mm]
±0.07 [mm]	Max. lateraler Wellenversatz Max. lateral shaft misalignment	±0.07 [mm]
±0.54 [mm]	Max. axialer Wellenversatz Max. axial shaft misalignment	±0.51 [mm]
±1 [Grad] [Degree]	Max. angularer Wellenversatz Max. angular shaft misalignment	±1 [Grad] [Degree]
45.50 [10^{-6} kgm²]	Trägheitsmoment Interia torque	49 [10^{-6} kgm²]
180 [g]	Masse Mass	186 [g]
4.50 M_A[Nm]	Anzugsmoment der Schrauben Tightening torque of screws	4.50 M_A[Nm]
41.1 [ø mm]	Störkreis bei Bohrungs-Ø ≤ 20 Swing circle with bore-Ø ≤ 20	41.1 [ø mm]

MKE-150

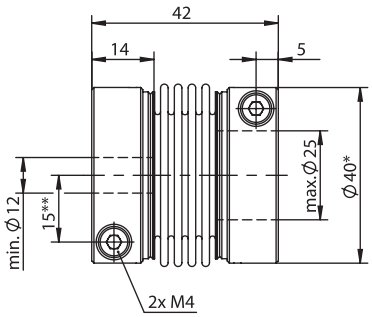

Bei Bohrungs-Ø > 20 / with bore-Ø > 20
*Ø46 // **17

Metallbalgkupplung MKJ-S
mit Klemmnabe

Metal bellow coupling MKJ-S
with clamping hub

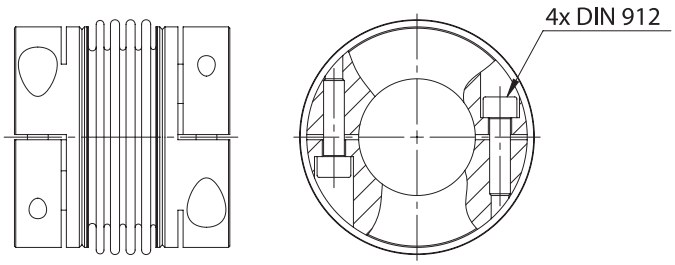

Merkmale
- Spielfreie Drehmomentübertragung
- Kleiner Einbauraum
- Hohe Temperaturbeständigkeit
- Niedriges Massenträgheitsmoment
- Ideal für Servomotoren
- Kleinste Rückstellkräfte auf die Lagerstellen

Werkstoff der Naben: Stahl
Werkstoff des Metallbalges: Edelstahl
Verbindung Balg-Nabe: geschweißt

Bestellbezeichnung / Beispiel:
MKJ-S-150 - 22H7 - 40H7
Typ+Größe Bohrung D1 Bohrung D2

Characteristics
- Backlash-free torque transmission
- A small space for assembly
- High level of thermal stability
- Very low mass moment of inertia
- Ideal for servomotors
- Low restore forces on bearing points

Material of hubs: Steel
Material of bellows: Stainless steel
Connection of bellows to hub: Welded

Order description / example:
MKJ-S-150 - 22H7 - 40H7
Type+Size Bore D1 Bore D2

Standard Optionen / Standardized options

Gewünschte Optionen müssen im Bestelltext angegeben werden (Legende Symbole S. 7).
Desired options have to be mentioned in the order text (key symbols p. 7).

MKJ-S-15

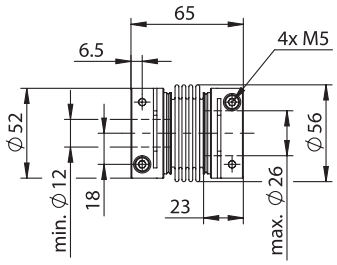

15 [Nm]	Nennmoment Nominal torque	40 [Nm]
24 [10^3 Nm/rad]	Torsionssteife Torsional stiffness	37.5 [10^3 Nm/rad]
400 [N/mm]	Laterale Federsteife Lateral spring stiffness	530 [N/mm]
38 [N/mm]	Axiale Federsteife Axial spring stiffness	39.5 [N/mm]
±0.1 [mm]	Max. lateraler Wellenversatz Max. lateral shaft misalignment	±0.1 [mm]
±0.8 [mm]	Max. axialer Wellenversatz Max. axial shaft misalignment	±0.8 [mm]
±0.8 [Grad] [Degree]	Max. angularer Wellenversatz Max. angular shaft misalignment	±0.8 [Grad] [Degree]
0.27 [10^{-3} kgm²]	Trägheitsmoment Interia torque	0.57 [10^{-3} kgm²]
0.70 [kg]	Masse Mass	1 [kg]
M5 [DIN 912-12.9]	Klemmschrauben Clamping screws	M6 [DIN 912-12.9]
8 M_A[Nm]	Anzugsmoment der Schrauben Tightening torque of screws	14 M_A[Nm]

MKJ-S-40

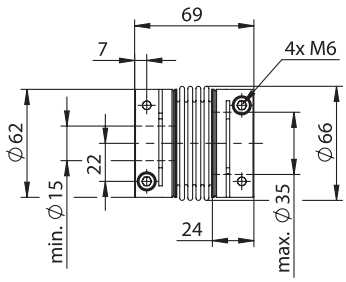

© by HA-CO GmbH • Phone +49 6022 655810 • info@ha-co.eu • www.ha-co.eu

MKJ-S-60

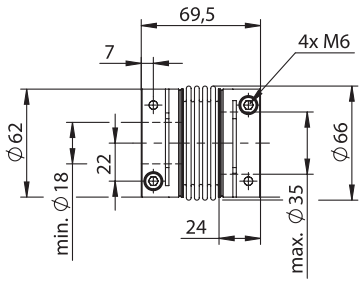

60 [Nm]	Nennmoment Nominal torque	100 [Nm]
47 [10^3 Nm/rad]	Torsionssteife Torsional stiffness	95 [10^3 Nm/rad]
790 [N/mm]	Laterale Federsteife Lateral spring stiffness	680 [N/mm]
71.50 [N/mm]	Axiale Federsteife Axial spring stiffness	51 [N/mm]
±0.1 [mm]	Max. lateraler Wellenversatz Max. lateral shaft misalignment	±0.1 [mm]
±0.7 [mm]	Max. axialer Wellenversatz Max. axial shaft misalignment	±0.9 [mm]
±0.8 [Grad] [Degree]	Max. angularer Wellenversatz Max. angular shaft misalignment	±0.8 [Grad] [Degree]
0.58 [10^{-3} kgm²]	Trägheitsmoment Interia torque	2.40 [10^{-3} kgm²]
1 [kg]	Masse Mass	2.20 [kg]
M6 [DIN 912-12.9]	Klemmschrauben Clamping screws	M8 [DIN 912-12.9]
14 M_A[Nm]	Anzugsmoment der Schrauben Tightening torque of screws	35 M_A[Nm]

MKJ-S-100

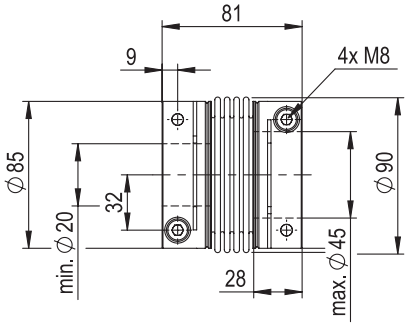

MKJ-S-150

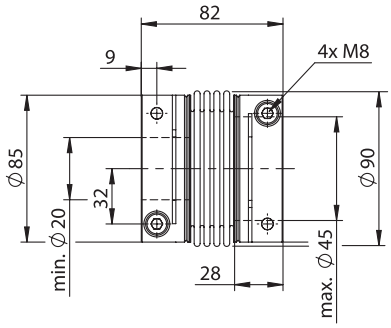

150 [Nm]	Nennmoment Nominal torque	200 [Nm]
110 [10^3 Nm/rad]	Torsionssteife Torsional stiffness	160 [10^3 Nm/rad]
110 [N/mm]	Laterale Federsteife Lateral spring stiffness	1500 [N/mm]
135 [N/mm]	Axiale Federsteife Axial spring stiffness	115 [N/mm]
±0.1 [mm]	Max. lateraler Wellenversatz Max. lateral shaft misalignment	±0.1 [mm]
±0.9 [mm]	Max. axialer Wellenversatz Max. axial shaft misalignment	±0.9 [mm]
±0.7 [Grad] [Degree]	Max. angularer Wellenversatz Max. angular shaft misalignment	±0.7 [Grad] [Degree]
2.40 [10^{-3} kgm²]	Trägheitsmoment Interia torque	4.70 [10^{-3} kgm²]
2.20 [kg]	Masse Mass	3.40 [kg]
M8 [DIN 912-12.9]	Klemmschrauben Clamping screws	M10 [DIN 912-12.9]
35 M_A[Nm]	Anzugsmoment der Schrauben Tightening torque of screws	69 M_A[Nm]

MKJ-S-200

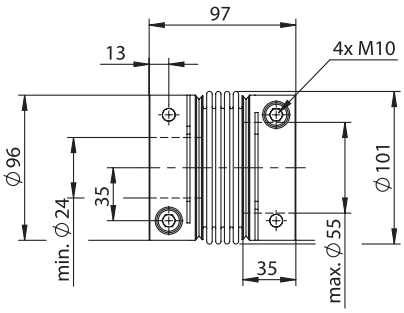

MKJ-S-350

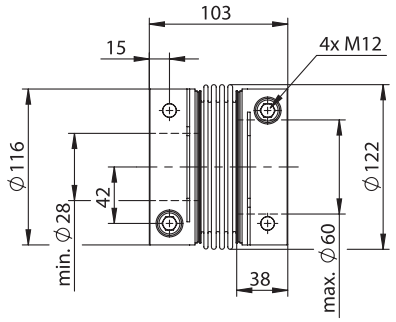

350 [Nm]	Nennmoment Nominal torque	500 [Nm]
230 [10^3 Nm/rad]	Torsionssteife Torsional stiffness	280 [10^3 Nm/rad]
1850 [N/mm]	Laterale Federsteife Lateral spring stiffness	2300 [N/mm]
85 [N/mm]	Axiale Federsteife Axial spring stiffness	115 [N/mm]
±0.1 [mm]	Max. lateraler Wellenversatz Max. lateral shaft misalignment	±0.1 [mm]
±1.0 [mm]	Max. axialer Wellenversatz Max. axial shaft misalignment	±0.9 [mm]
±0.7 [Grad] [Degree]	Max. angularer Wellenversatz Max. angular shaft misalignment	±0.7 [Grad] [Degree]
10.70 [10^{-3} kgm²]	Trägheitsmoment Interia torque	10.80 [10^{-3} kgm²]
5.30 [kg]	Masse Mass	5.30 [kg]
M12 [DIN 912-12.9]	Klemmschrauben Clamping screws	M12 [DIN 912-12.9]
120 M_A[Nm]	Anzugsmoment der Schrauben Tightening torque of screws	120 M_A[Nm]

MKJ-S-500

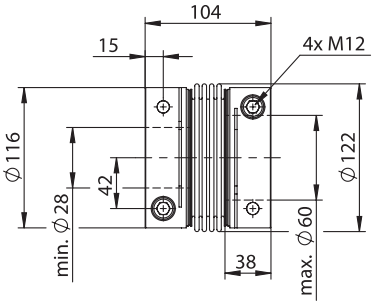

Metallbalgkupplung MKA-S
mit Klemmnaben aus Aluminium

Metal bellow coupling MKA-S
with clamping hub made of aluminium

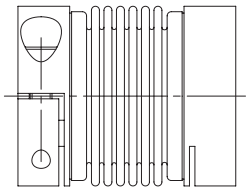

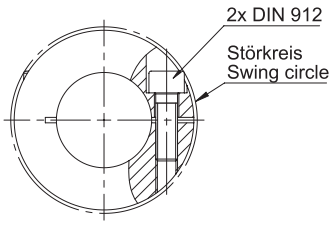

Merkmale
- Klemmnaben aus hochfestem Aluminium
- Spielfreie Drehmomentübertragung
- Kleiner Einbauraum
- Montagefreundlich
- Wartungsfrei
- Hohe Temperaturbeständigkeit
- Niedriges Massenträgheitsmoment
- Ideal für Servomotoren
- Kleinste Rückstellkräfte auf die Lagerstellen

Werkstoff der Naben: Aluminium
Werkstoff des Metallbalges: Edelstahl
Verbindung Balg-Nabe: eingerollt

Bestellbezeichnung / Beispiel:
MKA-S-150 - 28H7 - 42H7
Typ+Größe | Bohrung D1 | Bohrung D2

Characteristics
- Clamping hub made of high-strength aluminium
- Backlash-free torque transmission
- A small space for assembly
- Easy assembly
- Maintenance-free
- High level of thermal stability
- Very low mass moment of inertia
- Ideal for servomotors
- Low restore forces on bearing points

Material of hubs: Aluminium
Material of bellows: Stainless steel
Connection of bellows to hub: Rolled up

Order description / example:
MKA-S-150 - 28H7 - 40H7
Type+Size | Bore D1 | Bore D2

Standard Optionen / Standardized options

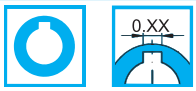

Gewünschte Optionen müssen im Bestelltext angegeben werden (Legende Symbole S. 7).
Desired options have to be mentioned in the order text (key symbols p. 7).

MKA-S-15		MKA-S-40
15 [Nm]	Nennmoment Nominal torque	40 [Nm]
9.3 [10^3 Nm/rad]	Torsionssteife Torsional stiffness	26.5 [10^3 Nm/rad]
87 [N/mm]	Laterale Federsteife Lateral spring stiffness	175 [N/mm]
13 [N/mm]	Axiale Federsteife Axial spring stiffness	27.5 [N/mm]
±0.20 [mm]	Max. lateraler Wellenversatz Max. lateral shaft misalignment	±0.18 [mm]
±1.0 [mm]	Max. axialer Wellenversatz Max. axial shaft misalignment	±1.0 [mm]
±1 [Grad] [Degree]	Max. angularer Wellenversatz Max. angular shaft misalignment	±1 [Grad] [Degree]
0.14 [10^{-3} kgm²]	Trägheitsmoment Interia torque	0.28 [10^{-3} kgm²]
0.3 [kg]	Masse Mass	0.5 [kg]
M6 [DIN 912-10.9]	Klemmschrauben Clamping screws	M8 [DIN 912-10.9]
14 M_A[Nm]	Anzugsmoment der Schrauben Tightening torque of screws	30 M_A[Nm]
56.2 [ø mm]	Störkreis Swing circle	68.5 [ø mm]

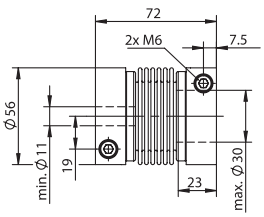

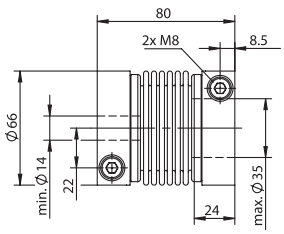

© by HA-CO GmbH • Phone +49 6022 655810 • info@ha-co.eu • www.ha-co.eu

MKA-S-60

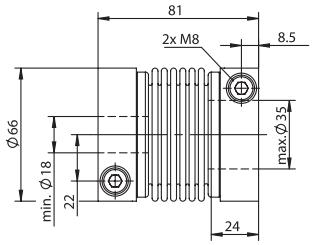

60 [Nm]	Nennmoment Nominal torque	100 [Nm]
37.7 [10^3 Nm/rad]	Torsionssteife Torsional stiffness	63.2 [10^3 Nm/rad]
262 [N/mm]	Laterale Federsteife Lateral spring stiffness	384 [N/mm]
49 [N/mm]	Axiale Federsteife Axial spring stiffness	45 [N/mm]
±0.18 [mm]	Max. lateraler Wellenversatz Max. lateral shaft misalignment	±0.2 [mm]
±0.9 [mm]	Max. axialer Wellenversatz Max. axial shaft misalignment	±1.3 [mm]
±1 [Grad] [Degree]	Max. angularer Wellenversatz Max. angular shaft misalignment	±1 [Grad] [Degree]
0.29 [10^{-3} kgm²]	Trägheitsmoment Interia torque	0.8 [10^{-3} kgm²]
0.5 [kg]	Masse Mass	0.8 [kg]
M8 [DIN 912-10.9]	Klemmschrauben Clamping screws	M10 [DIN 912-10.9]
30 M_A[Nm]	Anzugsmoment der Schrauben Tightening torque of screws	50 M_A[Nm]
68.5 [ø mm]	Störkreis Swing circle	84.0 [ø mm]

MKA-S-100

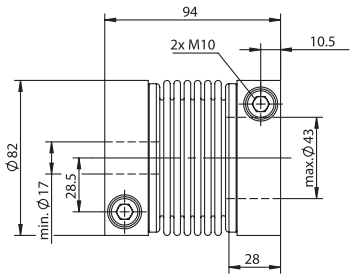

MKA-S-150

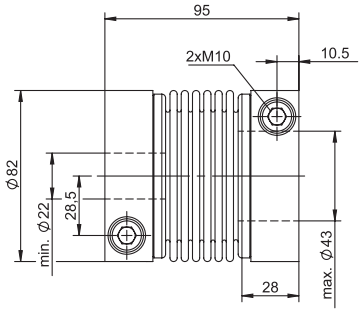

150 [Nm]	Nennmoment Nominal torque	200 [Nm]
76.5 [10^3 Nm/rad]	Torsionssteife Torsional stiffness	89.3 [10^3 Nm/rad]
473 [N/mm]	Laterale Federsteife Lateral spring stiffness	502 [N/mm]
80 [N/mm]	Axiale Federsteife Axial spring stiffness	78.5 [N/mm]
±0.2 [mm]	Max. lateraler Wellenversatz Max. lateral shaft misalignment	±0.2 [mm]
±1.2 [mm]	Max. axialer Wellenversatz Max. axial shaft misalignment	±1.25 [mm]
±1 [Grad] [Degree]	Max. angularer Wellenversatz Max. angular shaft misalignment	±1 [Grad] [Degree]
0.82 [10^{-3} kgm²]	Trägheitsmoment Interia torque	2.2 [10^{-3} kgm²]
0.8 [kg]	Masse Mass	1.4 [kg]
M10 [DIN 912-10.9]	Klemmschrauben Clamping screws	M12 [DIN 912-10.9]
65 M_A[Nm]	Anzugsmoment der Schrauben Tightening torque of screws	115 M_A[Nm]
84.0 [ø mm]	Störkreis Swing circle	101.3 [ø mm]

MKA-S-200

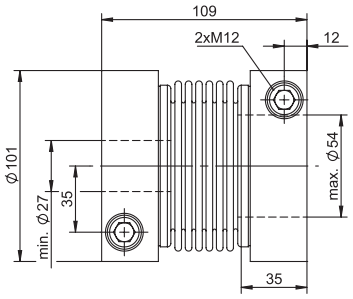

MKA-S-350

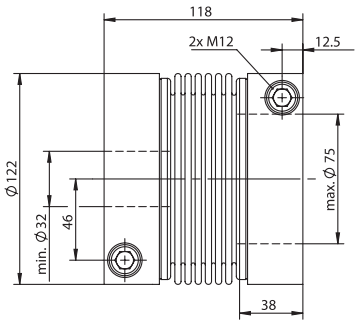

350 [Nm]	Nennmoment Nominal torque	500 [Nm]
179.9 [10^3 Nm/rad]	Torsionssteife Torsional stiffness	217.6 [10^3 Nm/rad]
611 [N/mm]	Laterale Federsteife Lateral spring stiffness	765 [N/mm]
60 [N/mm]	Axiale Federsteife Axial spring stiffness	80 [N/mm]
±0.2 [mm]	Max. lateraler Wellenversatz Max. lateral shaft misalignment	±0.17 [mm]
±1.5 [mm]	Max. axialer Wellenversatz Max. axial shaft misalignment	±1.3 [mm]
±1 [Grad] [Degree]	Max. angularer Wellenversatz Max. angular shaft misalignment	±1 [Grad] [Degree]
2.4 [10^{-3} kgm²]	Trägheitsmoment Interia torque	4.6 [10^{-3} kgm²]
1.5 [kg]	Masse Mass	2.1 [kg]
M12 [DIN 912-10.9]	Klemmschrauben Clamping screws	M12 [DIN 912-10.9]
115 M_A[Nm]	Anzugsmoment der Schrauben Tightening torque of screws	115 M_A[Nm]
123.5 [ø mm]	Störkreis Swing circle	123.5 [ø mm]

MKA-S-500

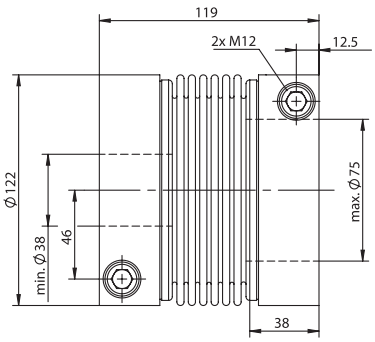

Metallbalgkupplung MKS-S
mit Klemmnabe steckbar

Metal bellow coupling MKS-S
with clamping hub connectible

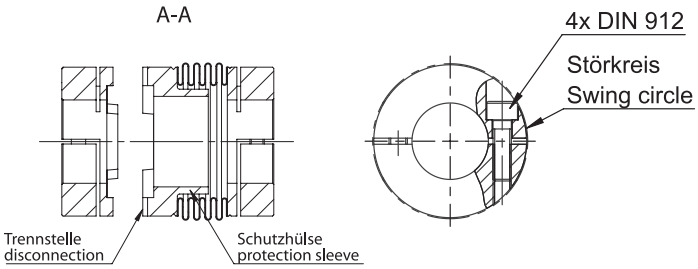

Merkmale
- Kleines Massenträgheitsmoment
- Montagefreundlich durch steckbare Klemmnabe
- Kleiner Einbauraum
- Wartungsfrei
- Ausgewuchtet
- Balg durch Hülse vor Stauchung und Verformung geschützt
- Ausgleich von Fluchtungsfehlern

Werkstoff der Naben: Stahl
Werkstoff des Metallbalges: Edelstahl
Verbindung Balg-Nabe: geschweißt

Bestellbezeichnung / Beispiel:

MKS-S-20	-	16H7	-	18H7
Typ+Größe		Bohrung D1		Bohrung D2

Hinweise:
Der Metallblag ist bei Fehlmanipulation (falsche Steckposition) durch die im Inneren angebrachte Schutzhülse vor Stauchung geschützt. Die axiale Vorspannung des Metallbalges (jeweils 1mm) garantiert eine absolute Spielfreiheit in der Steckverbindung.

Characteristics
- Very mass moment of inertia torque
- Easy assembly by connectible clamping hub
- Less assembly space required
- Maintenance-free
- Balanced
- Metal bellow protected of compression by a sleeve
- Compensation of alignment mistakes

Material of hubs: Steel
Material of bellows: Stainless steel
Connection of bellows to hub: Welded

Order description / example:

MKS-S-20	-	16H7	-	18H7
Type+Size		Bore D1		Bore D2

Note:
The bellow is protected by an inside protection sleeve to avoid compressed manipulation and stretch over of the bellow. The axial pre-charge of the bellow of 1mm guaranties a blacklash free connection.

Standard Optionen / Standardized options

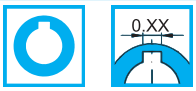

Gewünschte Optionen müssen im Bestelltext angegeben werden (Legende Symbole S. 7).
Desired options have to be mentioned in the order text (key symbols p. 7).

© by HA-CO GmbH • Phone +49 6022 655810 • info@ha-co.eu • www.ha-co.eu

MKS-S-20

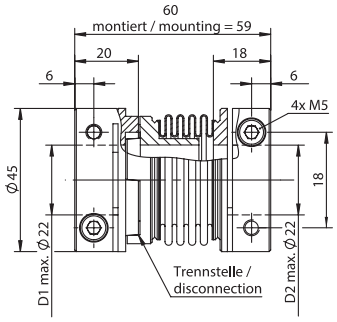

MKS-S-20		MKS-S-40
20 [Nm]	Nennmoment Nominal torque	40 [Nm]
13 [10^3 Nm/rad]	Torsionssteife Torsional stiffness	20 [10^3 Nm/rad]
361 [N/mm]	Laterale Federsteife Lateral spring stiffness	329 [N/mm]
65 [N/mm]	Axiale Federsteife Axial spring stiffness	50 [N/mm]
±0.1 [mm]	Max. lateraler Wellenversatz Max. lateral shaft misalignment	±0.15 [mm]
±0.7 [mm]	Max. axialer Wellenversatz Max. axial shaft misalignment	±0.7 [mm]
±1 [Grad] [Degree]	Max. angularer Wellenversatz Max. angular shaft misalignment	±1 [Grad] [Degree]
0.11 [10^{-3} kgm²]	Trägheitsmoment Interia torque	0.25 [10^{-3} kgm²]
0.40 [kg]	Masse Mass	0.70 [kg]
M5 [DIN 912-12.9]	Klemmschrauben Clamping screws	M6 [DIN 912-12.9]
8 M_A[Nm]	Anzugsmoment der Schrauben Tightening torque of screws	14 M_A[Nm]
–	Störkreis Swing circle	50.7 [ø mm]

MKS-S-40

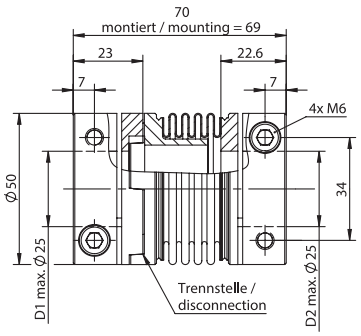

MKS-S-60

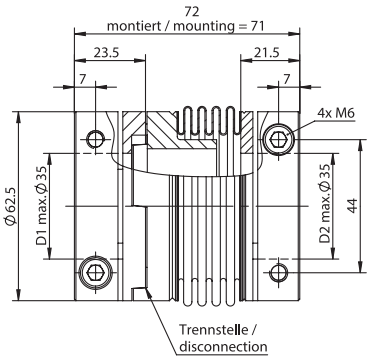

MKS-S-60		MKS-S-100
60 [Nm]	Nennmoment Nominal torque	100 [Nm]
41 [10^3 Nm/rad]	Torsionssteife Torsional stiffness	72 [10^3 Nm/rad]
378 [N/mm]	Laterale Federsteife Lateral spring stiffness	605 [N/mm]
45 [N/mm]	Axiale Federsteife Axial spring stiffness	67 [N/mm]
±0.15 [mm]	Max. lateraler Wellenversatz Max. lateral shaft misalignment	±0.15 [mm]
±0.7 [mm]	Max. axialer Wellenversatz Max. axial shaft misalignment	±0.9 [mm]
±1 [Grad] [Degree]	Max. angularer Wellenversatz Max. angular shaft misalignment	±1 [Grad] [Degree]
0.6 [10^{-3} kgm²]	Trägheitsmoment Interia torque	2.50 [10^{-3} kgm²]
1.10 [kg]	Masse Mass	2.50 [kg]
M6 [DIN 912-12.9]	Klemmschrauben Clamping screws	M8 [DIN 912-12.9]
14 M_A[Nm]	Anzugsmoment der Schrauben Tightening torque of screws	35 M_A[Nm]
–	Störkreis Swing circle	–

MKS-S-100

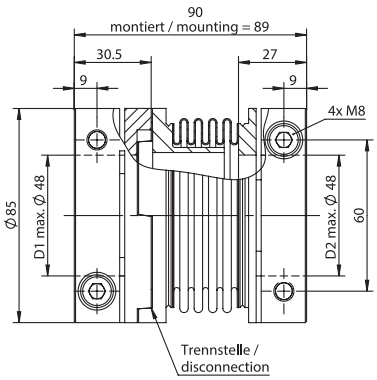

Metallbalgkupplung MKK-S
mit Klemmkonus

Metal bellow coupling MKK-S
with clamping cone

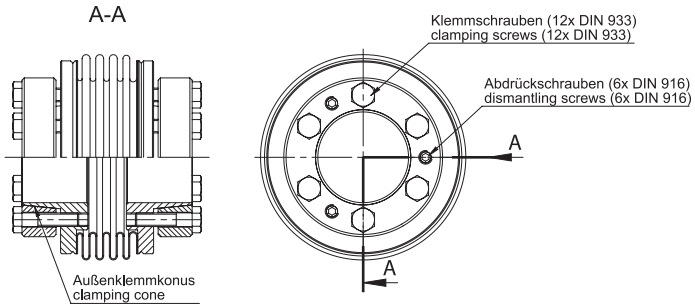

Merkmale
- Kleines Massenträgheitsmoment
- Kurze Einbaulänge
- Wartungsfrei
- Ausgewuchtet
- Spielfrei
- Ausgleich von Fluchtungsfehlern

Werkstoff der Naben: Stahl
Werkstoff des Metallbalges: Edelstahl
Verbindung Balg-Nabe: geschweißt

Bestellbezeichnung / Beispiel:
MKK-S-40 - 20H7 - 22H7
Typ+Größe Bohrung D1 Bohrung D2

Characteristics
- Very mass moment of inertia torque
- Short installation length
- Maintenance-free
- Balanced
- Backlash-free torque transmission
- Compensation of alignment mistakes

Material of hubs: Steel
Material of bellows: Stainless steel
Connection of bellows to hub: Welded

Order description / example:
MKK-S-40 - 20H7 - 22H7
Type+Size Bore D1 Bore D2

Standard Optionen / Standardized options

Gewünschte Optionen müssen im Bestelltext angegeben werden (Legende Symbole S. 7).
Desired options have to be mentioned in the order text (key symbols p. 7).

MKK-S-15

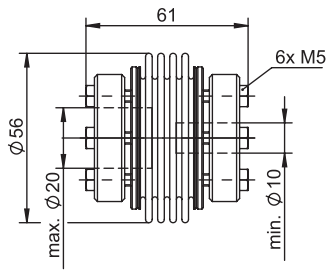

MKK-S-15		MKK-S-40
15 [Nm]	Nennmoment Nominal torque	40 [Nm]
8.5 [10^3 Nm/rad]	Torsionssteife Torsional stiffness	26.5 [10^3 Nm/rad]
87 [N/mm]	Laterale Federsteife Lateral spring stiffness	175 [N/mm]
13 [N/mm]	Axiale Federsteife Axial spring stiffness	27.5 [N/mm]
±0.2 [mm]	Max. lateraler Wellenversatz Max. lateral shaft misalignment	±0.2 [mm]
±1.0 [mm]	Max. axialer Wellenversatz Max. axial shaft misalignment	±1.0 [mm]
±1 [Grad] [Degree]	Max. angularer Wellenversatz Max. angular shaft misalignment	±1 [Grad] [Degree]
0.18 [10^{-3} kgm²]	Trägheitsmoment Interia torque	0.36 [10^{-3} kgm²]
0.50 [kg]	Masse Mass	0.80 [kg]
M5 [DIN 933-10.9]	Klemmschrauben Clamping screws	M5 [DIN 933-10.9]
7 M_A[Nm]	Anzugsmoment der Schrauben Tightening torque of screws	7 M_A[Nm]

MKK-S-40

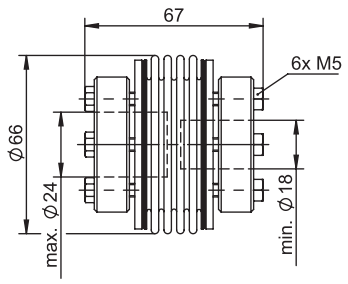

© by HA-CO GmbH • Phone +49 6022 655810 • info@ha-co.eu • www.ha-co.eu

MKK-S-60				MKK-S-100
	60 [Nm]	Nennmoment Nominal torque	100 [Nm]	
	33.5 [10^3 Nm/rad]	Torsionssteife Torsional stiffness	65 [10^3 Nm/rad]	
	262 [N/mm]	Laterale Federsteife Lateral spring stiffness	225 [N/mm]	
	49 [N/mm]	Axiale Federsteife Axial spring stiffness	35 [N/mm]	
	±0.2 [mm]	Max. lateraler Wellenversatz Max. lateral shaft misalignment	±0.22 [mm]	
	±1.0 [mm]	Max. axialer Wellenversatz Max. axial shaft misalignment	±1.3 [mm]	
	±1 [Grad] [Degree]	Max. angularer Wellenversatz Max. angular shaft misalignment	±1 [Grad] [Degree]	
	0.37 [10^{-3} kgm²]	Trägheitsmoment Interia torque	1.34 [10^{-3} kgm²]	
	0.83 [kg]	Masse Mass	1.46 [kg]	
	M5 [DIN 933-10.9]	Klemmschrauben Clamping screws	M6 [DIN 933-10.9]	
	7 M_A[Nm]	Anzugsmoment der Schrauben Tightening torque of screws	12 M_A[Nm]	

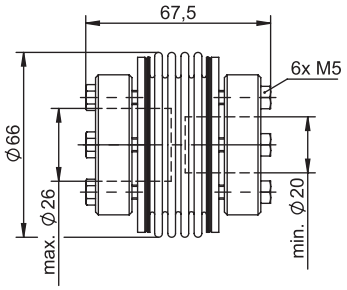

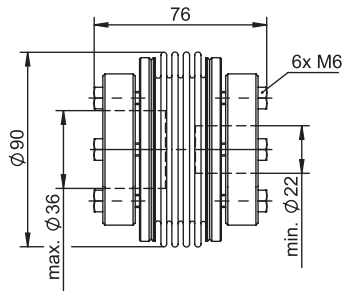

MKK-S-150				MKK-S-200
	150 [Nm]	Nennmoment Nominal torque	200 [Nm]	
	80 [10^3 Nm/rad]	Torsionssteife Torsional stiffness	110 [10^3 Nm/rad]	
	357 [N/mm]	Laterale Federsteife Lateral spring stiffness	502 [N/mm]	
	78.5 [N/mm]	Axiale Federsteife Axial spring stiffness	78.5 [N/mm]	
	±0.22 [mm]	Max. lateraler Wellenversatz Max. lateral shaft misalignment	±0.20 [mm]	
	±1.25 [mm]	Max. axialer Wellenversatz Max. axial shaft misalignment	±1.25 [mm]	
	±1 [Grad] [Degree]	Max. angularer Wellenversatz Max. angular shaft misalignment	±1 [Grad] [Degree]	
	1.39 [10^{-3} kgm²]	Trägheitsmoment Interia torque	3.00 [10^{-3} kgm²]	
	1.46 [kg]	Masse Mass	2.50 [kg]	
	M6 [DIN 933-10.9]	Klemmschrauben Clamping screws	M6 [DIN 933-10.9]	
	12 M_A[Nm]	Anzugsmoment der Schrauben Tightening torque of screws	12 M_A[Nm]	

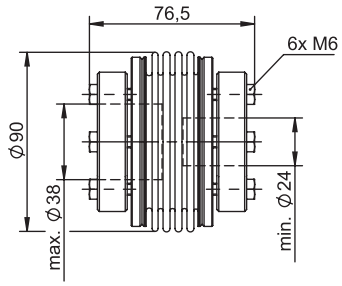

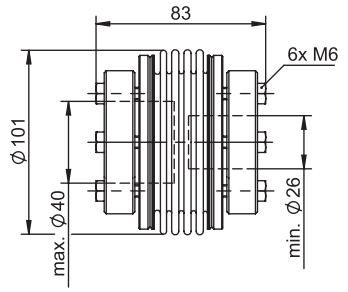
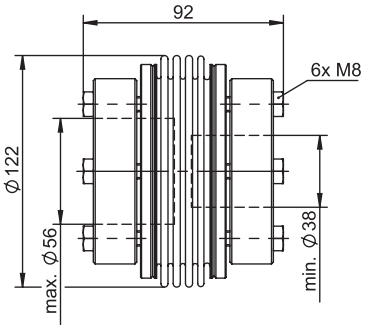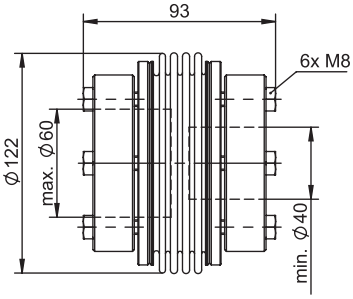
MKK-S-350				MKK-S-500
	350 [Nm]	Nennmoment Nominal torque	500 [Nm]	
	160 [10^3 Nm/rad]	Torsionssteife Torsional stiffness	190 [10^3 Nm/rad]	
	611 [N/mm]	Laterale Federsteife Lateral spring stiffness	765 [N/mm]	
	60 [N/mm]	Axiale Federsteife Axial spring stiffness	80 [N/mm]	
	±0.20 [mm]	Max. lateraler Wellenversatz Max. lateral shaft misalignment	±0.17 [mm]	
	±1.5 [mm]	Max. axialer Wellenversatz Max. axial shaft misalignment	±1.3 [mm]	
	±1 [Grad] [Degree]	Max. angularer Wellenversatz Max. angular shaft misalignment	±1 [Grad] [Degree]	
	6.20 [10^{-3} kgm²]	Trägheitsmoment Interia torque	6.40 [10^{-3} kgm²]	
	3.60 [kg]	Masse Mass	3.60 [kg]	
	M8 [DIN 933-10.9]	Klemmschrauben Clamping screws	M8 [DIN 933-10.9]	
	30 M_A[Nm]	Anzugsmoment der Schrauben Tightening torque of screws	30 M_A[Nm]